Pay Line Group

Service Manual

INTERNATIONAL

240A

INDUSTRIAL WHEEL TRACTOR

AND

WHEEL LOADER TRACTOR

FORM
SM-240A

FEBRUARY, 1979

Due to a continuous program of research and development, some procedures, specifications and parts may be altered in a constant effort to improve machines.

Periodic revisions may be made to this publication and mailed automatically to distributors. It is recommended that customers contact their distributor or dealer for information on the latest revision.

INTERNATIONAL

240A

INDUSTRIAL WHEEL TRACTOR

AND

WHEEL LOADER TRACTOR

FORM
SM-240A

FEBRUARY, 1979

Printed in United States of America.

(0379)

PAYLINE PUBLICATIONS INFORMATION

The following basic publications are available for additional information on this particular machine. Special publications, other than the basic publications shown below, can be ordered from the PAYLINE Index and Price List. (*) Please tear out this page and check the publications desired. Fill in ALL the information requested and mail to:

International Harvester Company, Printing and Distribution Services, 807 Blackhawk Drive
Westmont, Illinois, 60559, Attn: PAYLINE CUSTOMER SALES

Please send me (Check items in box)

	FORM NO.	DESCRIPTION	Price
☐	EPC-179	Engine Parts Catalog (D-179 Diesel)	$ 3.30
☐	PC-240A	Chassis Parts Catalog	9.40
☐	OM-240A	Operator's Manual	7.00
☐	ISS-1521-1	Engine Service Manual (D-179 Diesel)	8.70
☐	ISS-1522-3	Injection Pump Service Manual	21.80
☐	1 212 796 C1	Loader/Backhoe Safety Manual	1.50
☐	ISS-1546	Hydrostatic Transmission	6.30
(*) ☐	1 019 104 R14 (Or later)	Pay Line Index and Price List (List of all Pay Line Publications available)	2.00

Prices subject to change without notice.

NOTE: Enclose check or money order payable to International Harvester Company. DO NOT SEND CASH. (Please allow up to 30 days for delivery).

TYPE or PRINT information in the spaces below.

Date _____ Amount Enclosed $ _____
Name _____
Address _____
City _____ State _____ Zip _____

IMPORTANT: THE FOLLOWING IS YOUR RETURN SHIPPING LABLE. PLEASE FILL OUT COMPLETELY AND LEGIBLY. DO NOT DETACH!

FROM: International Harvester Company
Printing and Distribution Services
807 Blackhawk Drive
Westmont, Illinois 60559

TO: Name _____
Address _____
City _____ State _____ Zip _____

PAYLINE PUBLICATIONS INFORMATION

The following basic publications are available for additional information on this particular machine. Special publications, other than the basic publications shown below, can be ordered from the PAYLINE Index and Price List. (*) Please tear out this page and check the publications desired. Fill in ALL the information requested and mail to:

International Harvester Company, Printing and Distribution Services, 807 Blackhawk Drive
Westmont, Illinois, 60559, Attn: PAYLINE CUSTOMER SALES

Please send me (Check items in box)

	FORM NO.	DESCRIPTION	Price
☐	EPC-179	Engine Parts Catalog (D-179 Diesel)	$ 3.50
☐	PC-249A	Chassis Parts Catalog	[illegible]
☐	OM-249A	Operator's Manual	[illegible]
☐	ISS-15271-1	Engine Service Manual (D-179 Diesel)	8.70
☐	ISS-15272-3	Injection Pump Service Manual	21.50
☐	1 212 799 C1	Loader/Backhoe Safety Manual	1.00
☐	ISS-15249	Hydrostatic Transmission	6.30
(*) ☐	1 010 104 R14 (Or later)	Pay Line Index and Price List	2.00
		(List of all Pay Line Publications available)	

Prices subject to change without notice

NOTE: Enclose check or money order payable to International Harvester Company. DO NOT SEND CASH. (Please allow up to 30 days for delivery).

TYPE or PRINT information in the spaces below.

Date _____ Amount Enclosed $ _____
Name _____
Address _____
City _____ State _____ Zip _____

IMPORTANT: THE FOLLOWING IS YOUR RETURN SHIPPING LABEL. PLEASE FILL OUT COMPLETELY AND LEGIBLY. DO NOT DETACH!

FROM: International Harvester Company
Printing and Distribution Services
807 Blackhawk Drive
Westmont, Illinois 60559

TO: Name _____
Address _____
City _____ State _____ Zip _____

CONTENTS

INTRODUCTION

LUBRICATION

Instructions on the lubrication of each assembly are given in the Service Guide in the operator's manual. When assembling any parts, always coat all wearing surfaces with the lubricant specified in the guide. Except for such installations as taper pins, etc., whose surfaces should be clean and dry, use sufficient quantities of lubricant to prevent any danger of seizing, scoring, or excessive wear when the assembly is first operated. Failure to provide "starting lubrication" may result in serious damage.

GASKETS AND SEALS

Always use new gaskets and seals. When installing a new seal, be sure to install it as specified in the instructions. Be extremely careful not to damage the seal in any way during installation.

SERVICE TOOLS

These machines are designed so that few service tools are required other than those in the mechanics tool kit. Whenever the application of inexpensive special service equipment will facilitate work, it is shown. Otherwise, it is assumed that servicemen will select from their tool kits such tools as are required. Information regarding special tool equipment is given in the "Service Tool Manual" ISS-1531. Your distributor has most of this equipment and is in an excellent position to service these machines.

SERVICE PARTS

Always use genuine IH service parts. The best material obtainable and experience gathered through many years of manufacturing, enable International Harvester to produce quality that will not be found in imitation or "just as good" repair parts. No serviceman can affort to guarantee a repair job that is not serviced with genuine I.H. parts. No owner should be satisfied with other than genuine IH parts.

For the correct service parts to be used on a machine, always refer to the parts catalog for that particular machine. The microfiche and loose-leaf parts catalogs are accurate and are continually being brought up-to-date by the issuance of new pages and microfiche covering any changes in part numbers.

SAFETY PRECAUTIONS

A great deal of material contained in this service manual concerns itself with the removal and installation of exceptionally heavy items. During the time these operations are being carried out, safe working conditions and procedures are mandatory, to not only insure personal safety but the safety of others in the area. The following items are listed as a reminder of basic shop safety practices, too often neglected in day-to-day operation.

Hoists must be of sufficient capacity to lift the heavier units and have an ample safety margin.

Floors must be clean and dry. After draining operations, be sure all spillage is cleaned up. Electrical cords and wet floors make a dangerous combination.

Be sure heavy items are properly supported from hoist or floor jack before removing supporting members from machine.

Have sufficient service personnel available when removing or installing large heavy items in order to maintain control at all times.

If a heavy item begins to fall, let it fall; don't try to catch it.

The bucket must be resting on ground at all times during machine servicing and periods of idleness.

Do not start an engine indoors unless adequate exhaust ventilators are provided. Once an engine is running, move the machine outdoors as soon as possible.

Keep hands, feet, clothing away from rotating engine parts.

As a machine is being moved, the operator must face the direction of travel.

Think before you act. Carelessness is one luxury the serviceman cannot afford.

CONTENTS

GENERAL

SPECIAL SERVICE TOOLS REQUIRED

SECTION 2

FES 142-1	Tractor Stand Adapter
PLT 120-1	Lifting Sling (2)
PLT 120-2	Lifting Sling (2)
PLT-700-1	Aligning Dowels, 1/2"-13 (4)
PLT 853	Sav-Oil Caddy

SECTION 5

FES 142-1	Tractor Stand Adapter
PLT 103-4	Attaching Brackets
PLT 120-1	Lifting Sling (2)
PLT 700-1	Aligning Dowels (2)
PLT 700-4	Eye Bolt, 3/4"-10

SECTION 10

FES 52-1	Engine Adapter Plate
FES 52-13	Attaching Plate for Clutch Housing
PLT 503-3	Adapter Installing Plate
PLT 700-2	Dowel Pinion Gauge Bar
OTC 951	Puller

SECTION 11

FES 10-21	Aligning Dowels
PLT 120-1	Lifting Sling
PLT 120-2	Lifting Sling
PLT 700-2	Dowel Pinion Gauge Bar

SECTION 12

PLT 120-1	Lifting Sling
PLT 121	Depth Micrometer

SECTION 13

FES 10-21	Aligning Dowels
PLT 120-2	Lifting Sling
PLT 700-5	Brake Bleeder Hose
PLT 700-7	Brake Piston Installer

SECTION 14

PLT 104-1	Universal Drive Set, Complete
PLT 861-3	1/4 NPT Female Connector x 1/4 Tube, 7/16-20
PLT 858-4	Gauge, 0 to 60 psi
PLT 860-4	Gauge, 0 to 300 psi

SPECIAL SERVICE TOOLS REQUIRED

SECTION 15

FES 36	Carburator Jet Tool
FES 52-1	Adapter Plate
FES 52-6	Hydraulic Housing Adapter Bracket
FES 70-16	Female Adapter
PLT 860-4	Gauge, 0 to 60 psi
PLT 862-4	Plug
PLT 862-6	Plug
PLT 862-15	Reducer
PLT 862-16	Nut
PLT 862-19	5/8" Male Tube JIC Service Tee w/Running Female Swivel
PLT 863	Hydraulic Flo-Rater

SECTION 16

PLT-855	Spanner Wrench

STANDARD TORQUE DATA

Type 1, 5 and 8 Hardware

Recommended torque, in foot pounds, for all Standard Application Nuts and Bolts, provided:

A. All thread surfaces are clean and lubricated with SAE-30 engine oil. (See NOTE.)
B. Joints are rigid, that is, no gaskets or compressible materials are used.
C. When reusing nuts or bolts, use minimum torque values.

NOTE: *Multiply the standard torque by:*

0.65 when finished jam nuts are used.
0.70 when Molykote, white lead or similar mixtures are used as lubricants.
0.75 when parkerized bolts or nuts are used.
0.85 when cadmium plated bolts or nuts and zinc bolts w/waxed zinc nuts are used.
0.90 when hardened surfaces are used under the nut or bolt head.

When reusing bolts and nuts in service, use minimum torque values.

GENERAL

STANDARD TORQUE DATA

Type 1, 5 and 8 - Continued

BOLT SIZE	TYPE 1 STUDS ONLY				TYPE 1 6" LENGTH OR LESS				TYPE 1 LONGER THAN 6"			
	MIN.		MAX.		MIN.		MAX.		MIN.		MAX.	
	N·m	Ft-Lbs	N·m	Ft-Lbs	N·m	Ft-Lbs	N·m	Ft-Lbs	N·m	Ft-Lbs	N·m	Ft-Lbs
1/4	7	5	8	6	7	5	8	6	4	3	4	3
5/16	16	12	18	13	16	12	18	13	8	6	9	7
3/8	28	21	33	24	28	21	33	24	15	11	18	13
7/16	47	35	51	38	47	35	51	38	26	19	28	21
1/2	71	52	77	58	71	52	77	58	39	29	43	32
9/16	95	70	108	80	95	70	108	80	55	41	62	46
5/8	133	98	149	110	133	98	149	110	77	57	85	63
3/4	236	174	264	195	236	174	264	195	136	100	152	112
7/8	407	300	447	330	220	162	245	181	220	162	245	181
1	569	420	637	470	339	250	366	270	339	250	366	270
1-1/8	813	600	895	660	475	350	651	380	475	350	651	380
1-1/4	1139	840	1274	940	664	490	732	540	664	490	732	540
1-1/2	1993	1470	2224	1640	1152	850	1274	940	1152	850	1274	940
1-3/4	3186	2350	3322	2450	1803	1330	2020	1490	1803	1330	2020	1490
2	4745	3500	5288	3700	2712	2000	2983	2200	2712	2000	2438	2200

BOLT SIZE	TYPE 5				TYPE 8				TYPE 8 — SPECIAL USE (See NOTE)			
	MIN.		MAX.		MIN.		MAX.		MIN.		MAX.	
	N·m	Ft-Lbs	N·m	Ft-Lbs	N·m	Ft-Lbs	N·m	Ft-Lbs	N·m	Ft-Lbs	N·m	Ft-Lbs
1/4	12	9	14	10	16	12	19	15	15	11	18	13
5/16	26	19	28	21	37	27	41	30	33	24	37	27
3/8	43	33	50	37	61	45	68	50	57	43	64	47
7/16	71	53	81	60	102	75	115	85	94	69	103	76
1/2	108	80	122	90	156	115	176	130	141	104	159	117
9/16	156	115	176	130	217	160	244	180	203	150	230	170
5/8	217	160	244	180	298	220	339	250	285	210	312	230
3/4	298	290	434	320	542	400	610	450	475	350	529	390
7/8	583	420	637	470	881	650	990	730	746	570	827	630
1	854	630	963	710	1315	970	2834	1090	1125	850	1261	950
1-1/8	1152	850	1288	950	3227	1380	3457	1550	1600	1220	1803	1350
1-1/4	1726	1200	1830	1350	3986	1940	5532	2180	2278	1700	2549	1900
1-1/2	5423	2000	5830	2300	8542	3300	9084	3700	8134	3000	8542	3300
1-3/4	8541	3300	9084	3700	13965	5300	16270	6000	11796	4700	12474	5200
2	13559	5000	14236	5500	21693	8000	24405	9000	18981	7000	20066	7800

NOTE: *This column of torque represents maximum torques for capscrews in gray iron, when tread length engagement is at least 1-1/2 times diameter of bolt.*

BOLT IDENTIFICATION CHARTS

U.S. Bolt Type Identification Chart

I.H. TYPE	S.A.E. GRADE	DESCRIPTION	BOLTHEAD MARKING*
1	Equivalent 1 or 2	WILL HAVE A STANDARD MONOGRAM IN THE CENTER OF THE HEAD Low or Medium Carbon Steel Not Heat Treated	
5	5	WILL HAVE A AND 3 RADIAL LINES Quenched and Tempered Medium Carbon Steel	
8	8	WILL HAVE A AND 6 RADIAL LINES Quenched and Tempered Special Carbon or Alloy Steel	

* The center marking identifies the bolt manufacturer. The monogram is currently used; some bolts may still have an I.H. or a raised dot which previously identified I.H. bolts.

U.K. (British Bolt Type Identification Chart)

I.H. TYPE	BRITISH STANDARD INSTITUTE GRADE	BOLT HEAD MARKING					
5	S	TWLS	BEES 50-S-55	NEWALL HITENSILE "S"	SPNS	NEWTON S	SPARTS S
	T	TWLT	BEES 55-T-65	NEWALLOY T OR NEWALL HITENSILE "T"	SPNT	NEWTON T	SPARTS T
8	V	TWLV	BEES 65-V-75	NEWALLOY "V"	SPNV	NEWTON V	SPARTS V

GENERAL

STANDARD TORQUE DATA

TORQUE VALUES FOR TYPE 8 PHOSPHATE COATED HARDWARE

This chart provides tightening torque for applications as listed in the Parts Catalog for the machine involved. DO NOT SUBSTITUTE. Original equipment hardware defined as I.H. Type 8, coarse thread bolts and nuts and thru hardened flat washers (Rockwell "C" 38-45), all phosphate coated and assembled without supplemental lubrication (as received condition).

The torques shown in this chart also apply to the following:

1. Phosphate coated bolts used in tapped holes in steel or gray iron.

2. Phosphate coated bolts used with phosphate coated prevailing torque nuts (nuts with distorted threads or plastic inserts).

3. Phosphate coated bolts used with copper plated weld nuts.

Markings on bolt heads or nuts indicate material grade ONLY and are NOT to be used to determine required torque.

NOMINAL THREAD DIAMETER	STANDARD TORQUE ± 10%	
	NEWTON METERS	FOOT LBS
1/4	10	7
5/16	19	14
3/8	32	24
7/16	51	38
1/2	80	60
9/16	110	80
5/8	155	115
3/4	270	200
7/8	440	320
1	650	480
1-1/8	800	590
1-1/4	1100	830
1-3/8	1500	1100
1-1/2	1900	1400
1-3/4	3100	2300
2	4600	3400

TORQUE VALUES FOR HOSE CLAMPS

The following chart provides the tightening torques for hose clamps used in all rubber applications (radiators, air cleaner, operating lever boots, hydraulic systems. etc.).

CLAMP TYPE & SIZE	TORQUE PLUS OR MINUS 5%			
	RADIATOR, AIR CLEANER, BOOTS, ETC.		HYDRAULIC SYSTEM	
	NEWTON METERS	INCH LBS	NEWTON METERS	INCH LBS
"T" Bolt (Any Diameter)	7	60	5	45
Worm Drive — 1-3/4" Open Diameter and Under	3	25	5	25
Worm Drive — Over 1-3/4" Open Diameter	5	45	5	45

STANDARD TORQUE DATA

TORQUE VALUES FOR SPLIT FLANGE CONNECTIONS

The following chart provides the tightening torques for split flange connections used in hydraulic systems. Split flanges and fitting shoulders should fit squarely. Install all bolts, finger tight and then torque evenly.

NOTE: *Overtorquing bolts will damage the flanges and/or bolts, which may cause leakage.*

FLANGE SIZE IN INCHES (*)	BOLT SIZE IN INCHES	BOLT TORQUE	
		NEWTON METERS	FOOT POUNDS
1/2	5/16	20 - 40	15 - 18
3/4	3/8	30 - 37	22 - 27
1	3/8	37 - 47	27 - 35
1-1/4	7/16	47 - 61	35 - 45
1-1/2	1/2	62 - 79	46 - 58
2	1/2	75 - 88	55 - 65
2-1/2	1/2	107 - 123	79 - 91
3	5/8	187 - 203	138 - 150
3-1/2	5/8	159 - 180	117 - 133

(*) Inside diameter of hydraulic tube or hose fitting.

TORQUE VALUES FOR HYDRAULIC TUBES AND FITTINGS

TUBE NUTS					"O" RING BOSS PLUGS AND SWIVEL NUTS	
FOR 37° FLARED FITTINGS					JIC – 37° SEAT	
SIZE	TUBING O.D.	THREAD SIZE	TORQUE – FT-LBS			
			MIN.	MAX.	MIN.	MAX.
4	1/4	7/16-20	10	20	6	10
5	5/16	1/2-20	15	25	10	15
6	3/8	9/16-18	25	35	15	20
8	1/2	3/4-16	40	55	25	30
10	5/8	7/8-14	55	75	35	40
12	3/4	1-1/16-12	75	95	60	70
14	7/8	1-3/16-12	95	115	70	80
16	1	1-5/16-12	115	145	80	90
20	1-1/4	1-5/8-12	150	180	95	115
24	1-1/2	1-7/8-12	200	250	120	140
32	2	2-1/2-12	300	350	250	300

Above torque figures are recommended for plain, cadmium or zinc plated fittings, dry or wet installations.

Swivel nuts either swaged or brazed.

These torques are not recommended for tubes with wall thickness of .035 or less.

GENERAL

SPECIFICATIONS AND CAPACITIES

CAPACITIES (Approximate)

COOLING SYSTEM ..... 13.2 l (3.5 gal)
CRANKCASE
- With filter change ..... 7.6 l (8 qts)
- Without filter change ..... 6.6 l (7 qts)

FUEL TANK ..... 75.7 l (20 gal)
TRANSMISSION AND HYDRAULIC SYSTEM ..... (Common reservoir) (Total fill)
- Hydrostatic transmission
  - Tractor ..... 53.01 l (14 gal)
  - Loader ..... 70.0 l (18.5 gal)
- Synchromesh transmission
  - Tractor ..... 34.0 l (9.0 gal)
  - Loader ..... 51.0 l (13.5 gal)
- Torque Converter Transmission
  - Loader ..... 57.0 l (15.0 gal)

AXLES
- Type
  - Front ..... Case "I" beam rated @ 4563 kg (10000 lb) working capacity
  - Rear ..... Live type, flanged axles mounted on tapered roller bearings in case iron carriers with inboard planetaries

BRAKES
- Foot ..... Hydraulic, disc type, manually operated individual or interlocked
- Parking Brake ..... type, band actuated, internal type drum on bevel type shaft

ENGINE
- Make and Model ..... I.H. D-179
- Type ..... Naturally Aspirated
- Number of Cylinders 3
- Bore ..... 98.4 mm (3.87 in)
- Stroke ..... 128.5 mm (5.06 in)
- Displacements ..... 2.93 l (179 in^3)
- Engine Speeds:
  - High Idle (No load)
    - Hydrostatic or Torque Converter ..... Approx. 2650 rpm
    - Synchromesh ..... Approx. 2480 rpm
  - Governed Speed (Full load)
    - Hydrostatic or Torque Converter ..... 2400 rpm
    - Synchromesh ..... 2200 rpm
  - Low Idle
    - Hydrostatic or Torque Converter ..... Approx. 700 rpm
    - Synchromesh ..... Approx. 700 rpm
- Valve Clearance (Engine warm):
  - Intake ..... 0.25 mm (0.01 in)
  - Exhaust ..... 0.30 mm (0.012 in)
- Starting System ..... 12 volt

ELECTRICAL
- Alternator output ..... 28 amperes
- Battery ..... One 12 volt
- Fuse ..... Cartridge Type, 25 Amperes
- System voltage ..... 12 volt, negative ground

HITCH (If Equipped) ..... 3 point hitch, category I with hydraulic draft control. Torsion bar sensing device

HYDRAULIC SYSTEM

Pumps . . . . . Internal Type
Tractor . . . . . 47.3 lpm mounted, gear (12.5 gpm)
Loader
Hydrostatic and Synchromesh. . . . . 64.3 lpm (17 gpm)
Torque Converter . . . . . 70 lpm (18.5 gpm)
Charge (Torque Converter Only) . . . . . 42 lpm (11.25 gpm)
Reservoir . . . . . Internal, located in rear frame with a common oil supply for power train, hydraulic system and brakes
Filtration. . . . . One 25 micron suction filter
Hydrostatic Transmission . . . . . One 25 micron suction filter

LOADER

Bucket Capacities . . . . . Heaped
1778 mm (70 in) standard bucket. . . . . 0.573 m^3 (3/4 yd^3)
1549 mm (61 in) optional bucket . . . . . 0.382 m^3 (1/2 yd^3)
2006 mm (79 in) optional bucket . . . . . 0.67 m^3 (7/8 yd^3)
2108 mm (83 in) snow bucket . . . . . 0.955 m^3 (1-1/4 yd^3)
Cylinders
Boom
Bore . . . . . 63 mm (2.5 in)
Stroke . . . . . 728 mm (28.7 in)
Bucket
Bore . . . . . 63 mm (2.5 in)
Stroke . . . . . 571 mm (22.5 in)
Dimensions (See NOTE)

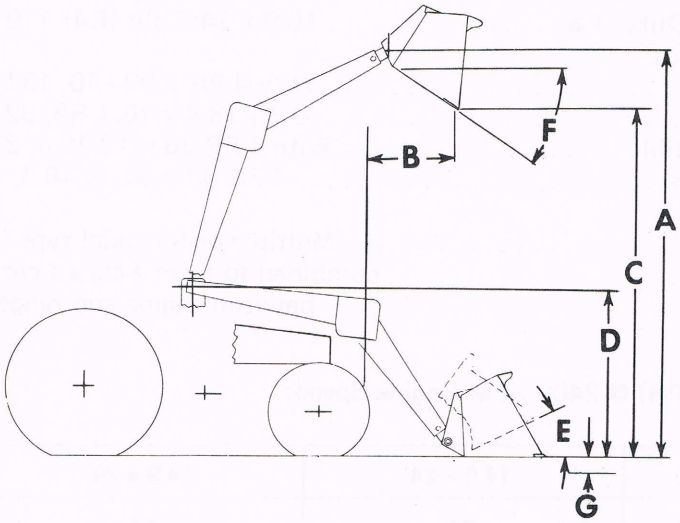

Fig. 1
Loader Dimensions.

GENERAL
SPECIFICATIONS AND CAPACITIES

LOADER - Continued

A. Height to hinge pin ..... 3.2 m (10 ft, 6 in)
B. Dump reach ..... 0.5 m (1 ft, 6 in)
C. Dump clearance ..... 2.59 m (8 ft, 8 in)
D. Height (Boom lowered) ..... 1.68 m (5 ft, 6 in)
E. Roll back (Ground level) ..... 30°
F. Dump angle ..... 45°
G. Digging depth below ground level ..... 0.1 m (4 in)

Front axle oscillation ..... 22°

NOTE: *Dimensions are based on 7.50 x 16-8 ply F3 front tires and 14.9 x 24-6 ply R4 rear tires.*

Capacities (Maximum)
Breakout force ..... 1996 kg (4400 lbs)
Lift ..... 1497 kg (3300 lbs)
Operating ..... 1043 kg (2300 lbs)

TIRES
Size and Inflation Pressure
Tractor
Standard
Front ..... 7.50 x 16-8 ply (F3) 308 to 339 kPa (44 to 48 psi)
Rear ..... 14.9 x 24-6 ply (R4) 124 to 137 kPa (18 to 20 psi)
Optional
Front ..... 11L x 16-3 ply (F3) 248 to 275 kPa (36 to 40 psi)
Rear ..... 16.9 x 24-6 ply (R4) 110 to 124 kPa (16 to 18 psi)
Rear ..... 14.9 x 28-6 ply (R4) 124 to 137 kPa (18 to 20 psi)
Rear w/Heavy Duty Disc ..... 16.9 x 24-6 ply (R4) 110 to 124 kPa (16 to 18 psi)
Lo Boy Attachment
Front ..... With 4 PR 9.00 - 10, 137 to 165 kPa (20 to 24 psi)
Rear ..... 6 PR 18.4 x 16.1 R3, 82 to 110 kPa (12 to 16 psi)
Front (Terra Rib) ..... With 4 PR 26 x 12-12.4, 27 to 110 kPa (4 to 16 psi)
Rear (Terra Rib) ..... 4 PR 33 x 20-16-16.1, 27 to 96 kPa (4 to 14 psi)

TRANSMISSION
Hydrostatic ..... Multiple piston axial type hydraulic pump and motor combined to form a closed circuit hydraulic drive system between engine and range transmission with infinite variable speeds

Ground Speed KPH (MPH) @ 2400 RPM Engine Speed:

TIRE	SIZE	14.9 x 24		14.9 x 28		16.9 x 24	
	TYPE	R4		R4		R4	
	RANGE	FWD	REV	FWD	REV	FWD	REV
HAND CONTROL	LOW	7.8 (4.8)	3.3 (2.05)	8.3 (5.1)	3.6 (2.2)	8.1 (5.0)	3.5 (2.1)
	HIGH	29.7 (18.4)	12.7 (7.9)	31.9 (19.8)	13.7 (8.5)	30.9 (19.2)	13.2 (8.2)
FOOT CONTROL	LOW	7.8 (4.8)	6.9 (4.3)	8.3 (5.1)	7.4 (4.6)	8.1 (5.0)	7.1 (4.4)
	HIGH	29.7 (18.4)	26.3 (16.3)	31.9 (19.8)	28.3 (17.5)	30.9 (19.2)	27.3 (16.9)

TRANSMISSION - Continued

Synchromesh. . . . . The 8F - 4R gear drive transmission is comprised of 4 synchromesh in-line gears that have a high-low and reverse range. The speed gears in this transmission can be changed on the go with full depression of the clutch and no gear teeth clash. Changing from high to low range requires a full stop.

Ground Speed KPH (MPH) @ 2200 RPM Engine Speed

TIRE	SIZE		14.9 x 24		14.9 x 28		16.9 x 24	
	TYPE		R4		R4		R4	
		GEAR	FWD	REV	FWD	REV	FWD	REV
RANGE	LO	1st	2.9 (1.8)	3.5 (2.17)	3.1 (1.93)	3.7 (2.3)	3.0 (1.86)	3.6 (2.24)
		2nd	4.7 (2.92)	5.6 (3.48)	5.0 (3.11)	6.1 (3.79)	4.9 (3.04)	5.9 (3.67)
		3rd	6.3 (3.91)	7.6 (4.72)	6.8 (4.23)	8.2 (5.1)	6.6 (4.1)	7.9 (4.91)
		4th	8.1 (5.03)	9.8 (6.09)	8.8 (5.47)	10.5 (6.52)	8.5 (5.29)	10.2 (6.34)
	HI	1st	11.1 (6.9)	—	11.9 (7.39)	—	11.5 (7.15)	—
		2nd	18.0 (11.2)	—	19.3 (12.0)	—	18.7 (11.6)	—
		3rd	24.3 (15.1)	—	26.1 (16.2)	—	25.3 (15.7)	—
		4th	31.3 (19.4)	—	33.6 (20.9)	—	32.5 (20.2)	—

Torque Converter . . . . . Six speeds forward, 3 reverse w/full hydraulic reverse

Stall torque ratio. 2.54

Ground Speed KPH (MPH) @ 2400 RPM Engine Speed:

TIRE	SIZE		14.9 x 24		14.9 x 28		16.9 x 24	
	TYPE		R4		R4		R4	
		GEAR	FWD	REV	FWD	REV	FWD	REV
RANGE	LO	1st	3.15 (1.96)	3.96 (2.46)	3.38 (2.1)	4.26 (2.65)	3.27 (2.03)	4.12 (2.56)
		2nd	5.12 (3.18)	6.44 (4.0)	5.5 (3.42)	6.92 (4.3)	5.33 (3.31)	6.69 (4.16)
		3rd	6.92 (4.3)	8.7 (5.4)	7.43 (4.62)	9.35 (5.81)	7.19 (4.47)	9.04 (5.62)
	HI	1st	12.07 (7.50)	—	12.97 (8.06)	—	12.55 (7.8)	—
		2nd	19.61 (12.19)	—	21.08 (13.1)	—	20.39 (12.67)	—
		3rd	26.52 (16.48)	—	28.5 (17.71)	—	27.56 (17.13)	—

SPECIAL TORQUE APPLICATIONS	METRIC	U.S.
AIR CLEANER		
Hose clamps	Min. 3 N·m	Min. 23 in-lbs
BRAKE BLEEDER SCREWS	5 to 6 N·m	40 to 50 in-lbs
ELECTRICAL		
Alternator (Lucas)		
Bottom pivot bolt and nut	21 to 28 N·m	15 to 20 ft-lbs
Pulley nut	28 to 48 N·m	20 to 35 ft-lbs
Top adjusting bolt and nut	11 to 14 N·m	8 to 10 ft-lbs
Battery cable and ground strap		
Positive (P) terminal nut	8 to 11 N·m	75 to 100 in-lbs
Negative (N) terminal nut	8 to 11 N·m	75 to 100 in-lbs
Battery hold down clamp		
Hold down nut	2 to 3 N·m	15 to 18 in-lbs
Cranking motor		
Solenoid mounting bolts	45 to 50 N·m	33 to 37 ft-lbs
Delco-Remy		
Battery terminal nut (*)	7 to 14 N·m	5 to 10 ft-lbs
"S" terminal nut	1 to 2 N·m	12 to 17 in-lbs
"R" terminal nut (*)	2 to 4 N·m	16 to 30 in-lbs
Bosch		
Battery terminal nut (*)	11 to 14 N·m	8 to 10 ft-lbs
Terminal nut (*)	2 to 3 N·m	15 to 20 in-lbs
Lucas		
Battery terminal nut (*)	11 to 14 N·m	8 to 10 ft-lbs
Flashing warning light assembly		
Mounting nut	2.3 to 2.8 N·m	20 to 25 in-lbs
Fuel tank sending unit		
Mounting bolts	2 N·m	18 to 20 in-lbs
Gauges		
Clamp mounting nut	Max. 1 N·m	5 ti 8 in-lbs
Charge indicator and fuel gauge terminal nut (*)	Max. 1 N·m	5 to 8 in-lbs
Ammeter terminal nut (*)	1 to 2 N·m	10 to 15 in-lbs
Junction block		
Terminal nut (*)	1 to 2 N·m	8 to 13 in-lbs
Transmission oil pressure switch		
Terminal nut (*)	1.7 to 2.3 N·m	15 to 20 in-lbs
ENGINE CYLINDER HEAD BOLTS	142 N·m	105 ft-lbs
OIL FILTER CASE ON MCV	16 to 22 N·m	12 to 16 ft-lbs
RESERVOIR DRAIN PLUG (3)	61 to 68 N·m	45 to 50 ft-lbs
VALVE HOUSING COVER NUTS	5 N·m	4 ft-lbs
WHEELS		
Rear wheels to hub bolts	298 to 325 N·m	220 to 240 ft-lbs
Front wheel to hub bolts		
3.6 to 4.0 mm (0.14 to 0.16 in) thick disc	108 to 136 N·m	80 to 100 ft-lbs
4.6 to 5.6 mm (0.18 to 0.22 in) thick disc	169 to 190 N·m	125 to 140 ft-lbs

(*) Nut which fastens cable.

CONTENTS

SPECIFICATIONS

Special Bolt and Nut Torque Data

Rear frame to center section cap screws	115 N·m (85 lbf-ft)
Main frame locating capscrews	34 N·m (25 lbf-ft)
Main frame to axle housing clamp bolts	576 N·m (425 lbf-ft)
Wheel mounting stud nuts	312 N·m (230 lbf-ft)
ROPS mounting bolts:	
5/8 inch	216 - 230 N·m (160 - 180 lbf-ft)
3/4 inch	332 - 380 N·m (245 - 280 lbf-ft)

SPLITTING THE TRACTOR

ROPS REMOVAL

1. Install two safety stands, one on each side of the loader frame near the rear axles.

2. Remove the necessary electrical harness.

3. Using a suitable hoist and sling, support the protective frame.

4. Remove the necessary mounting bolts and remove the frame from the tractor.

NOTE: *Pay particular attention to the location of all shims, bushing and backing plates to facilitate reassembly.*

LOADER REMOVAL

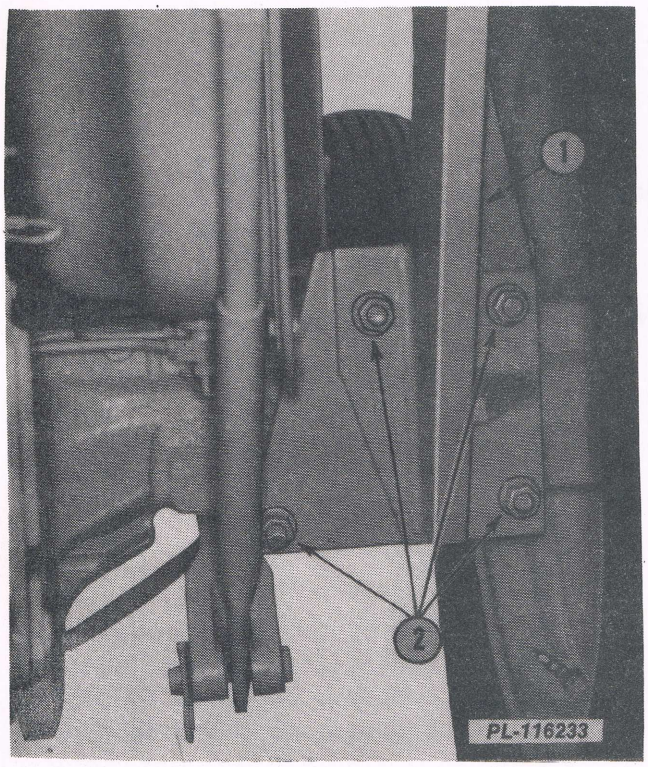

Fig. 1
Removing the Loader

1. ROPS frame
2. Rear mounting bolts

Fig. 2

1. Front bracket

1. Support the loader with slings PLT-120-1 and PLT-120-2 and a suitable hoist.

2. Disconnect the hydraulic supply and return tubes from the loader valves.

3. Remove the nuts from the loader subframe rear mounting bolts (2, Fig. 1). Leave the top two bolts in place to support the loader frame.

NOTE: *With different buckets, the position of the slings may have to be changed in order to balance the loader.*

4. Remove the cap screws from the front mounting brackets. See Fig. 2.

5. Raise the loader and move it forward to remove it from the tractor.

SPLITTING THE TRACTOR
FRONT SECTION SPLIT

Fig. 3

1. Safety bar

NOTE: *It is not necessary to remove the loader to perform a front split.*

1. Raise the loader and support it with a safety bar made of angle iron. (1, Fig. 3)

2. Drain the coolant from the radiator.

3. Shut off the fuel at the fuel tank.

4. Remove the muffler (vertical) or disconnect at the exhaust manifold (underslung). Remove the hood assembly and rear side panels.

5. Disconnect the battery ground cable.

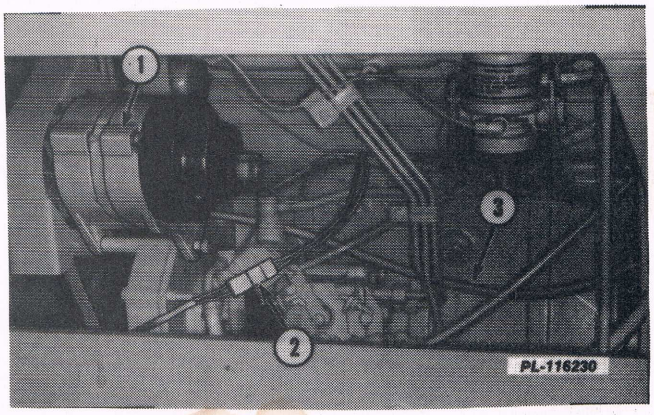

Fig. 4

1. Alternator
2. Wire to headlights
3. Tachometer cable

SPLITTING THE TRACTOR

FRONT SECTION SPLIT

6. Disconnect the tachometer cable from the engine and move it to the rear. See Fig. 4.

7. Disconnect the wires to the alternator and the wire to the headlights. See Fig. 4.

8. Disconnect the wires at the cranking motor solenoid. Remove the wiring harness from the clips and move the harness to the rear.

9. Disconnect the fuel shut off cable at the injection pump.

10. Disconnect the wire to the ether injector. Disconnect the fuel return line at the "T" and plug and cap the lines.

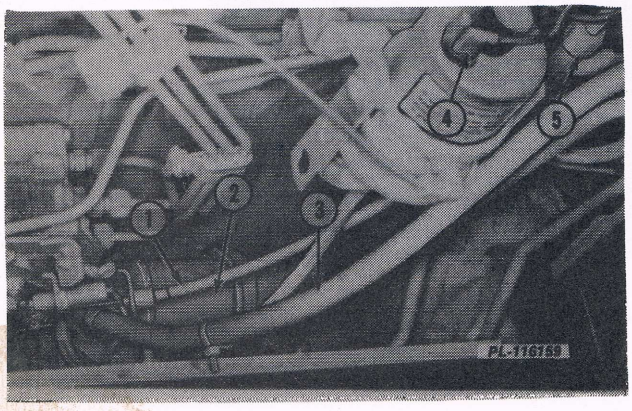

Fig. 5

1. Fuel shut-off cable.
2. Cranking motor solenoid.
3. Wiring harness.
4. Wire to ether injector.
5. Fuel return "T".

11. Disconnect the water temperature sending wire at the thermostat housing.

12. Remove the plastic straps from the power steering and cooler lines.

13. Disconnect the two power steering tubes. See Fig. 6.

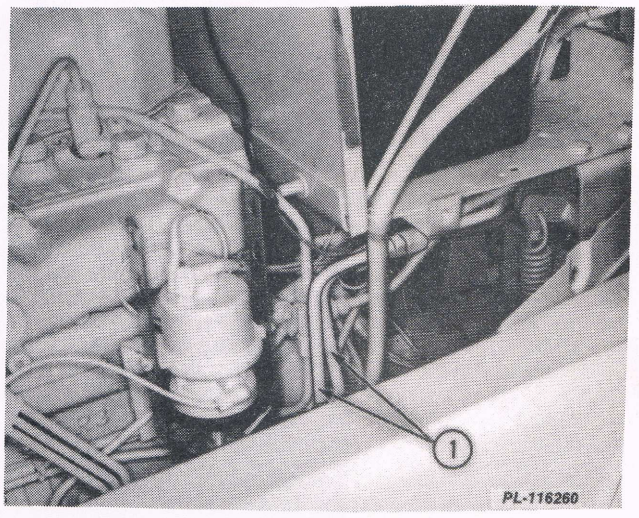

Fig. 6

1. Power steering tubes

14. Disconnect the two oil cooler tubes. See Fig. 7.

15. Disconnect the brake keep-full tube from the oil cooler return tube, if necessary. See Fig. 7.

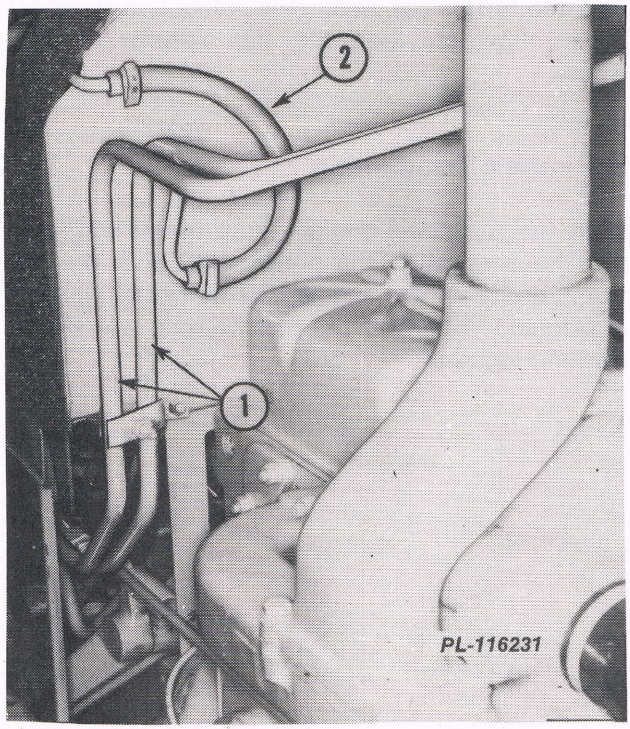

Fig. 7

1. Oil cooler tubes 2. Brake keep-full tube

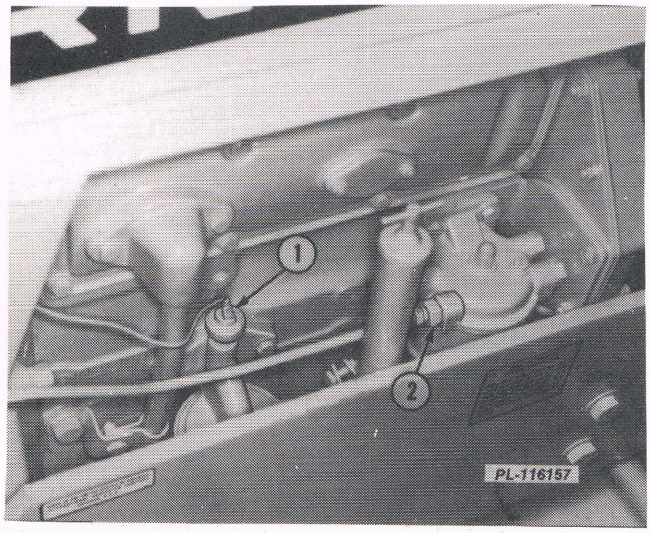

Fig. 8

1. Oil pressure sending wire 2. Fuel inlet line

16. Disconnect the throttle rod on the right side of the engine at the rear.

17. Disconnect the oil pressure sending wire. Disconnect the fuel inlet tube at the transmission (Fig. 8).

18. Position stands under the clutch housing and the loader frame to support the rear of the tractor.

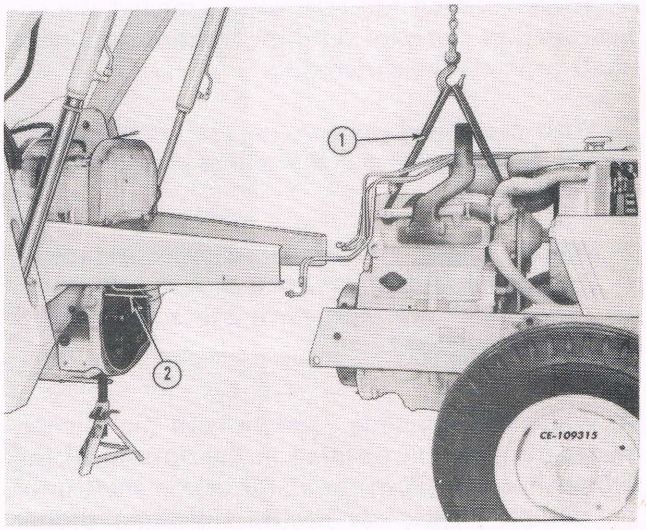

Fig. 9
Typical Illustration.

1. Sling, PLT-120-1 2. Dowels, PLT-700-1

19. Support the front of the tractor with a hoist and sling PLT-120-1 as shown in Fig. 9.

20. Remove two cap screws securing the engine to the clutch housing and install two dowels PLT-700-1 as shown in Fig. 9.

21. Remove the remaining cap screws and move the engine away from the rear section.

RECOUPLING THE TRACTOR

Synchromesh Transmission

NOTE: *With the tractor in gear, raising one rear wheel will permit turning of the transmission input shaft by rotating the raised wheel.*

1. Ratchet the engine section towards the center section until the teeth on the flywheel are just inside of the clutch housing.

2. While rotating the rear wheel, ratchet the engine section rearward until the transmission input shaft contacts the clutch disc.

3. With continued pressure on the ratchet, while still rotating the wheel, the splines will soon align and engage.

NOTE: *Check for proper engagement by attempting to rotate the wheel. If it is firmly locked and will not turn, the splines are properly engaged.*

4. While still applying pressure with the ratchet, reach through the opening in the bottom of the clutch housing. Turn the IPTO driven shaft until an audible "click" is heard, indicating proper spline engagement.

NOTE: *The dowels in the engine end plate should now be started into the clutch housing if the IPTO driven shaft is properly engaged with the clutch assembly.*

Torque Converter Transmission

Place the torque converter unit on the transmission shaft before recoupling the tractor.

Align the locating marks on the torque converter drive plate and flywheel.

Bolt the transmission to the bell housing. Making sure the torque converter drive plate and flywheel are in alignment, bolt the flex plate to the flywheel.

Hydrostatic Transmission

With the hydraulic charge pump in the transmission housing, align the pump shaft with the flywheel and turn the engine slightly until the shaft is splined. Then bolt the bell housing and clutch housing together.

SPLITTING THE TRACTOR
REAR SECTION SPLIT

NOTE: *If tractor is equipped with a ROPS or loader it must be removed. Refer to "Loader Removal and ROPS Removal" in this section.*

1. Drain the Hy-Tran using PLT-853 Sav-Oil Caddy.

2. Remove the left and right covers and the housing cover. Fig. 10.

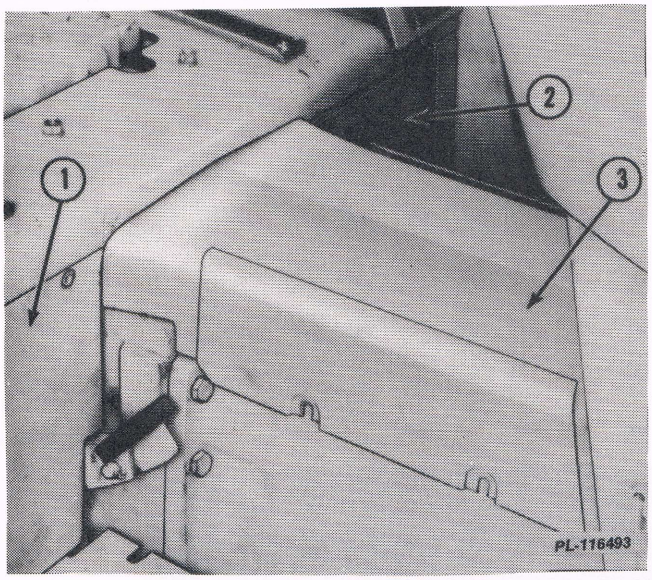

Fig. 10

1. Right cover
2. Left cover
3. Housing cover.

3. Disconnect the linkage, hydraulic tubes and wiring harness as necessary.

4. Disconnect the foot throttle linkage, if so equipped.

5. Remove the foot platforms.

6. Disconnect the hydraulic brake tubes.

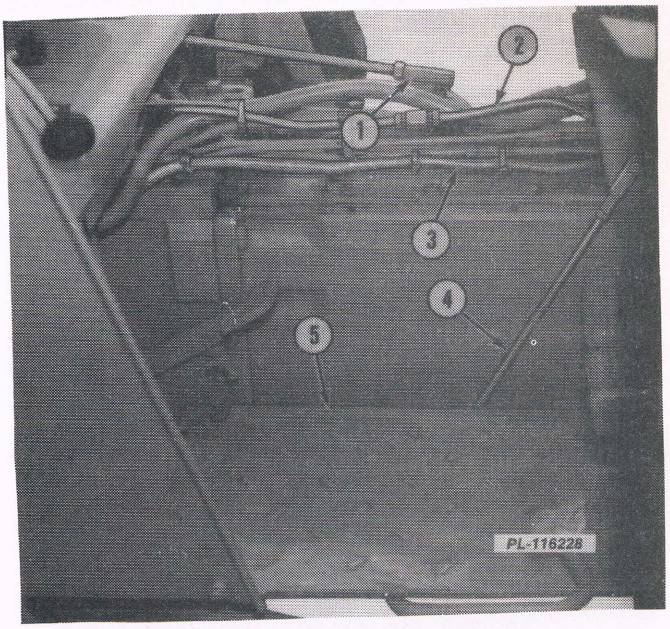

Fig. 11
Typical Illustration.

1. Linkage
2. Hydraulic tubes
3. Wiring harness
4. Throttle link (if so equipped)
5. Platform

7. Remove the IPTO cover plate on the right side ahead of the rear axle.

Synchromesh and Hydrostatic Transmissions

8. Remove the IPTO clutch assembly and IPTO drive shaft. Refer to Section 14.

SPLITTING THE TRACTOR

REAR SECTION SPLIT

9. Remove the snap ring and then remove the IPTO and hydraulic pump drive gear (1, Fig. 12) from the rear of the PTO shaft.

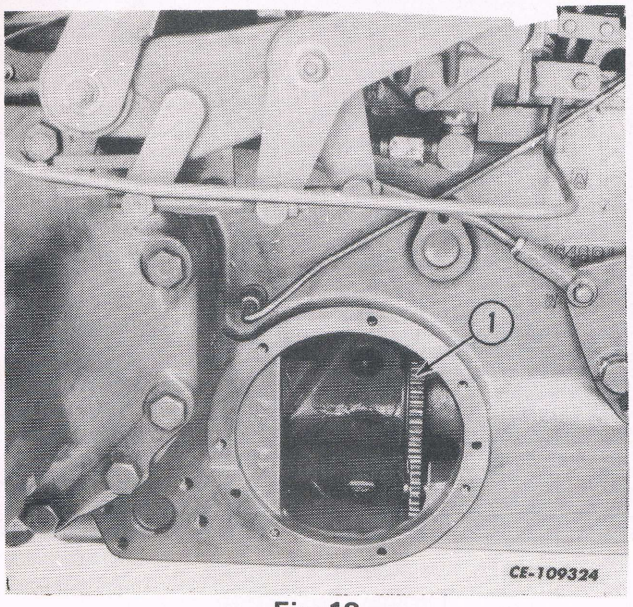

Fig. 12

1. IPTO and hydraulic pump drive gear

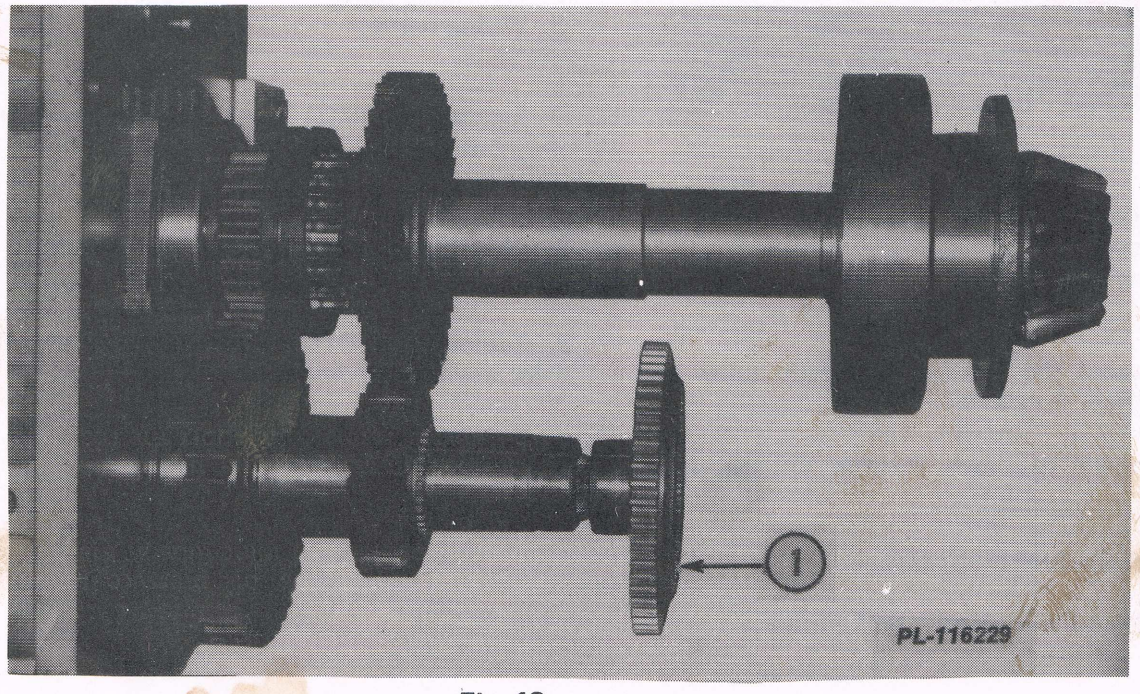

Fig. 13

1. Pump drive gear

10. Remove the remaining snap rins on the PTO shaft

SPLITTING THE TRACTOR
REAR SECTION SPLIT

All Types of Transmissions

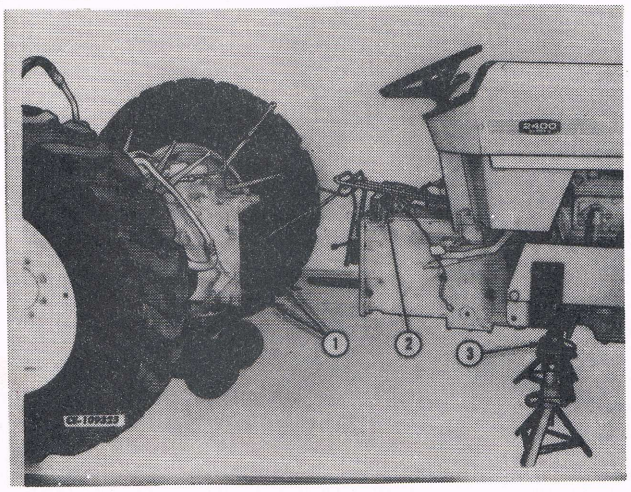

Fig. 14
Typical Illustration.

1. Dowels, PLT-700-1
2. Wood block
3. Stands, FES 142-1

11. Attach splitting stands FES 142-1 to the clutch housing and adjust to support the weight of the clutch housing.

12. Position a rolling floor jack under the rear frame and adjust to support the rear frame.

13. Place a wood block under the hydraulic tubes as shown to raise them for clearance.

14. Remove two cap screws securing clutch housing to the rear frame and install two dowels, PLT-700-1.

15. Remove remaining cap screws and roll the rear section away from the front section.

ROPS PROTECTIVE FRAME REINSTALLATION

Reverse the procedure of removal of the ROPS to reinstall it. Torque the mounting bolsts as follows:
5/8-inch, 216 - 230 N·m (160 -180 ft-lbs) and 3/4-inch to 332 - 380 N·m (245 - 280 ft.lbs).

CONTENTS

SPECIFICATIONS

Special Torques

Tie rod mounting bolts	81 - 95 N·m (60 - 70 ft-lbs)
Wheel mounting bolts	
3.6 to 4.0 mm (0.14 to 0.16 in) thick disc	108 - 136 N·m (80 - 100 ft-lbs)
4.6 to 5.6 mm (0.18 to 0.22 in) thick disc	170 - 190 N·m (125 - 140 ft-lbs)
Front Wheel Toe-In Dimension	4 mm (0.160 in)

FRONT END, AXLE AND WHEELS
REMOVAL AND DISASSEMBLY

AXLE

CAUTION! Apply the parking brake and securely block the rear wheels.

1. Remove the steering cylinder and tie rod. See the "Power Steering" section.

2. Remove the front and rear saddle block bolts securing the axle pivot pin.

3. Position a rolling floor jack under the center of the front axle.

   NOTE: *Break the torque of the wheel mounting bolts before the tires are completely off the ground.*

4. Raise the front end of the machine off the ground and support the front of the machine with jack stands.

5. Remove the front wheels.

6. Drive the front axle pivot pin out, while raising or lowering the floor jack as necessary to free the pin.

7. Lower the floor jack and remove the axle.

WHEEL HUB

(Refer to Fig. 1)

1. Remove the hub cap (11), cotter pin (12), bearing retaining nut (10) and washer (9).

2. Pull on the hub (6) to move the bearing cone (8) off its seat, and remove the bearing cone. The cone should come off without the need of a pulling tool.

Remove the hub (6) with bearing cups (4 and 7).

3. Remove the bearing cone (5) from the spindle of the steering knuckle (1).

4. Remove the seal retainers (13 and 14) and the seal (3) from the spindle of the steering knuckle (1). Discard the felt seal.

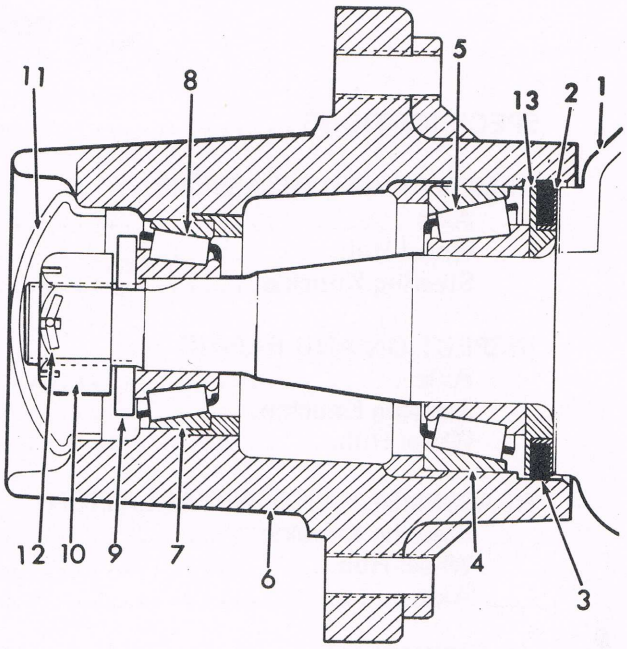

CE-113424A

Fig. 1

Wheel Hub.

1. Steering knuckle
2. Inner seal retainer
3. Felt seal
4. Inner bearing cup
5. Inner bearing cone
6. Wheel hub
7. Outer bearing cup
8. Outer bearing cone
9. Washer
10. Bearing retaining nut
11. Hub cap
12. Cotter pin
13. Outer retainer

STEERING KNUCKLE

1. Remove the wheel hub as described under "Wheel Hub" in this section.

2. Remove the steering knuckle caps (1, Fig. 2) and cap gaskets. Discard the gaskets.

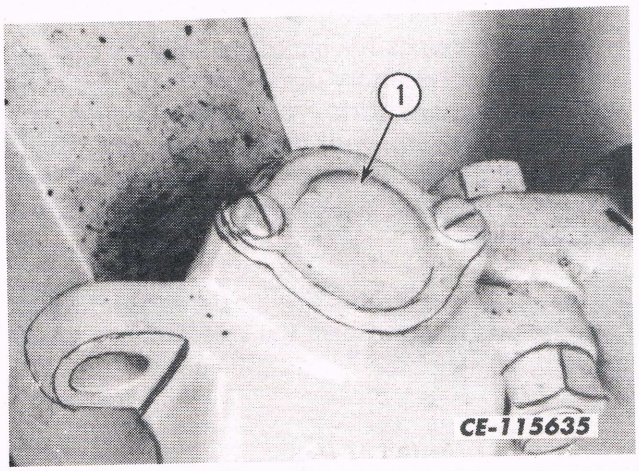

Fig. 2
Steering Knuckle.
1. Steering Knuckle Caps.

3. Remove the lower lubrication fitting from the steering knuckle.

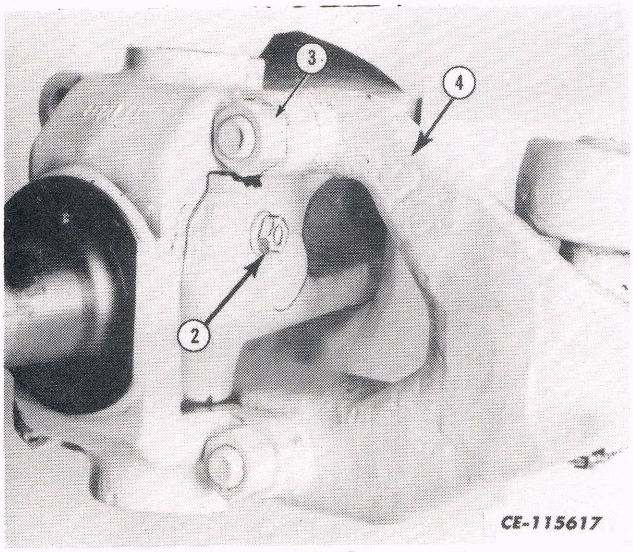

Fig. 3
Loosening Draw Key Hex Nut.

2. Draw key hex nut.
3. Steering arm bolts.
4. Steering arm.

4. Loosen the bolts (3) holding the steering knuckle to the steering arm (4). Refer to Fig. 3.

5. Loosen the king pin draw key hex nut (2) enough to be able to tap the nut with a soft mallet and move the key off its seat. Remove the nut and lock washer. Refer to Fig. 3.

6. Using a suitable punch, tap out the king pin draw key.

7. Remove the king pin (5). Refer to Fig. 4.

8. Remove the steering knuckle (6) to steering arm (4), bolts (3) and remove the knuckle, shims and thrust bearing from the axle.

NOTE: *Note the number and thickness of the steering knuckle spacer shims for each steering knuckle removed. During reassembly, the shims must be returned to their proper location.*

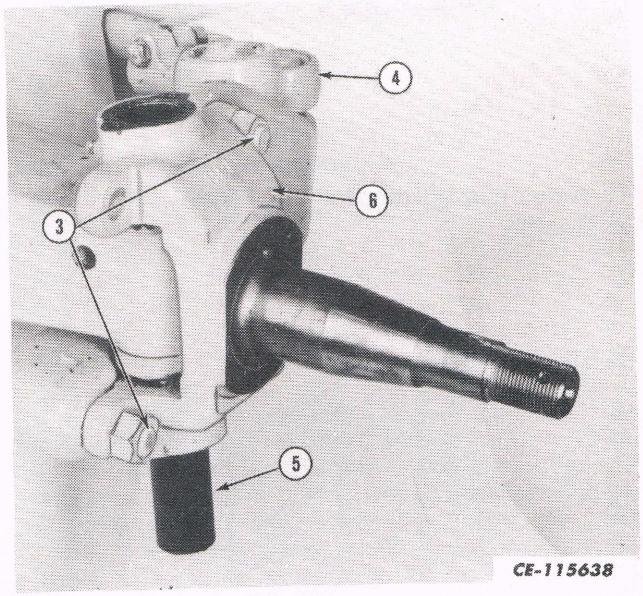

Fig. 4
King Pin Partially Removed.

3. Steering arm bolts.
4. Steering arm.
5. King pin.
6. Steering knuckle.

FRONT END, AXLE AND WHEELS

INSPECTION AND REPAIR

AXLE

Inspect the axle pivot bushings (1) for excessive wear or damage. If necessary, drive the old bushings and spacer (2) out and press new bushings and spacer in the bore. The bushings must be flush with the face of the axle (3) as shown in Fig. 5.

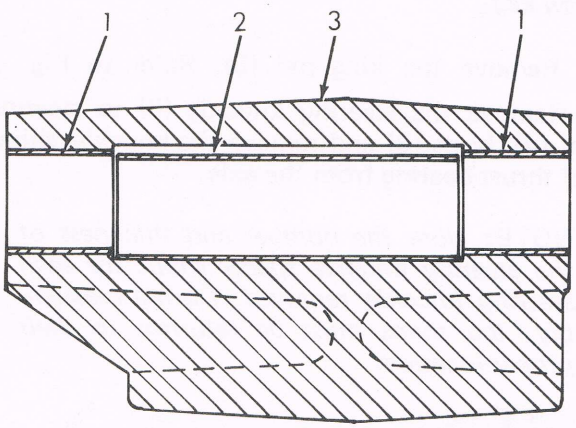

CE-113397

Fig. 5
Axle Bushing.

1. Axle pivot bushings
2. Spacer
3. Axle

STEERING KNUCKLE

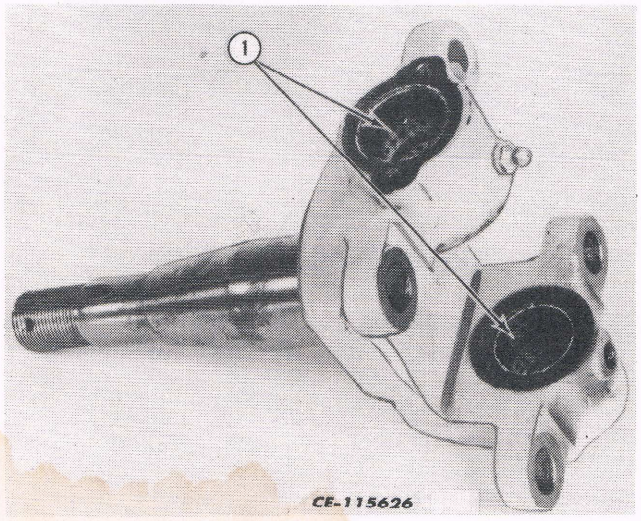

Fig. 6
Steering Knuckle Pivot Pin Bushings.

1. Steering knuckle bushing.

1. Inspect the steering knuckle bushings (1) for excessive wear or damage. If new bushings are to be installed, press out the old bushings and press in new ones. See Fig. 6.

WHEEL HUB

1. Inspect bearings for excessive wear or damage and replace if necessary. If bearing cups (4 and 7) need replacement, drive out the old cups and press new ones in, until they bottom out. Reusable bearings should be soaked in clean oil and wrapped with clean paper until ready for reassembly. See Fig. 7.

2. Remove any corrosion or hardened foreign material that may exist on the seal bore surface of the hub (6). See Fig. 7.

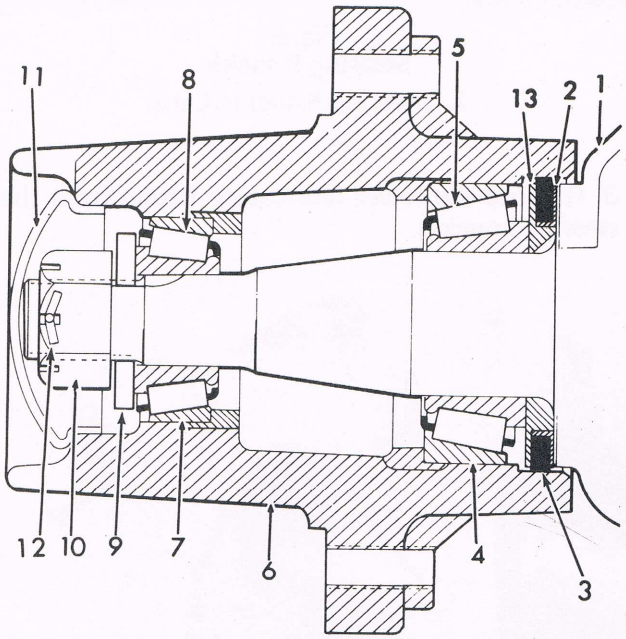

CE-113424A

Fig. 7
Wheel Hub.

1. Steering knuckle
2. Inner seal retainer
3. Felt seal
4. Inner bearing cup
5. Inner bearing cone
6. Wheel hub
7. Outer bearing cup
8. Outer bearing cone
9. Washer
10. Bearing retaining nut
11. Hub cap
12. Cotter pin
13. Outer seal retainer

STEERING KNUCKLE
(See Figs. 2, 3 and 4)

1. Position the steering knuckle, shims and thrust bearing on the axle. Loosely install the cap screws.

NOTE: *Install shims as needed until end play is removed.*

2. Reinstall the king pin, being sure the notch in the pin will align with the draw pin hole in the axle.

3. Tap the king pin draw key into the axle and secure with the lock washer and nut. Refer to Fig.

4. Tighten the bolts holding the steering knuckle to the steering arm.

5. Install the lower lubrication fitting on the steering knuckle.

6. Reinstall the steering knuckle caps and cap gaskets.

7. Reinstall the wheel hub as described under "Wheel Hub" in this section.

WHEEL HUB
(See Fig. 7)

Wash all parts in an oil solvent and dry thoroughly with compressed air. Bearings must be cleaned separately in clean solvent and special efforts taken to protect their finely machined surfaces. If compressed air is used for drying, DO NOT SPIN BEARINGS.

NOTE: *When replacing tapered roller bearings, both the cup and cone roller assembly MUST be from the same bearing manufacturer. Apply a light coat of clean oil on the roller bearings when installing.*

Inspect all bearings, cups and cones. Replace if pitted or damaged in any way. Replace bearings with badly rusted, flaked or damaged cages. Lubricate and wrap usable bearings until ready for installation.

1. Install seal retainers (13 and 14) and new felt seal (3) on the spinlde of steering knuckle (1)

2. Repack bearing cone (5) with IH-251 HEP grease or equivalent No. 2 Multi-Purpose Lithium Grease. Install the bearing on the spindle until it bottoms out.

3. Position hub (6) on the spindle.

4. Repack bearing cone (8) and install the cone and washer (9) on the spindle.

5. Install the retaining nut (10) and torque to 95 N·m (70 ft-lb) while rotating the wheel hub (6). Back off the retaining nut and retorque to 34 N·m (25 ft-lb) while rotating the wheel hub. Back off the retaining nut approximately 1/4 turn and install the new cotter pin (12).

6. Reinstall hub cap (11).

AXLE

1. Using a rolling floor jack, raise the axle into position and install pivot pin. Secure the pivot pin in place with the front and rear saddle block bolts.

NOTE: *Install pivot pin so saddle block bolts line up with grooves in pivot pin.*

2. Install the steering cylinder. Refer to "Power Steering" section.

3. Reinstall the tie rod. Torque the hex slotted nuts to 81 - 94 N·m (60 - 70 lbf-ft). Do not back off the nuts to index the cotter pin.

4. Position the wheels on the wheel hubs and install the wheel bolts finger tight.

5. Using the rolling floor jack, remove the jack stand and lower the front end of the machine until part of the weight is on the tires. Torque the wheel bolts to 108-136 N·m (80-100 lbf-ft) if equipped with 3.6-4.0 mm (0.14.16 in) thick wheel disc. Torque the wheel bolts to 170-190 N·m (125-140 lbf-ft) if equipped with 4.6-5.6 mm (0.18.22 in) thick wheel disc.

NOTE: *Check the wheel mounting bolts every 10 hours of machine operation until the torque stabilizes.*

6. Completely lower the front end to the ground.

TOE-IN

1. Place the front wheels in the straight ahead position.

2. Mark the inner surface of the front rims midway up the rear. A line passing through this mark and the center of the hub should be parallel to the floor.

3. Measure the distance between the mark on the right wheel and that on the left wheel (A, Fig 8). Keep the front wheels straight and roll the tractor straight forward until the front wheels have made one-half revolution. The marks on the tire should now be level with the hub and in front of it.

4. Again measure the distance between the marks (B, Fig. 8) . This measurement should be 4 mm (0.16 in) less than the first measurement. If not, proceed as follows:

   a. Loosen the tie rod adjustment lock nuts (2, Fig. 8).

   b. Turn the tie rod until the tires are 4 mm (0.16 in) closer in the front than in the rear.

   c. Tighten the tie rod lock nuts.

   d. Loosen the piston rod adjustment lock nut (1) and turn the piston rod as necessary so that the tractor turns equally in both directions. See Fig. 9.

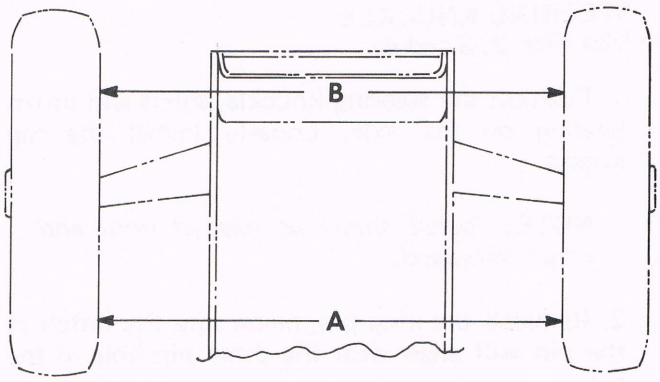

CE-115606

Fig. 8
Toe-In Alignment.

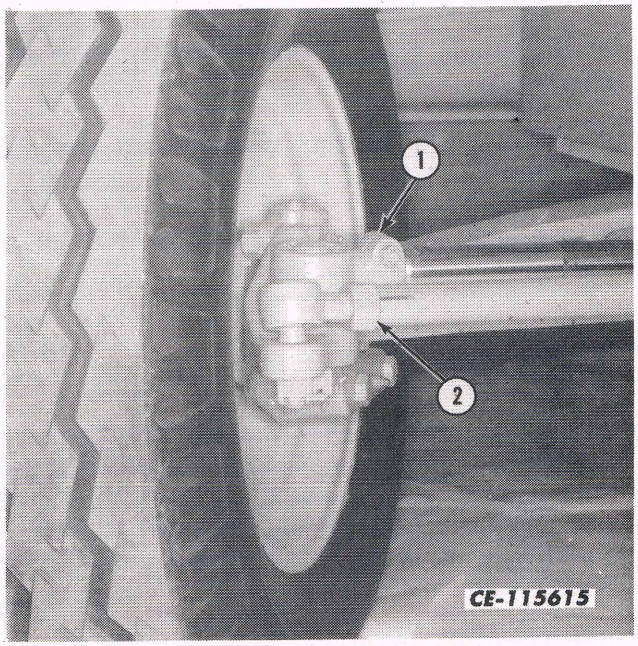

Fig. 9
Tie Rod Lock Nut - Right Side Shown.

1. Piston rod adjustment lock nut.
2. Tie rod adjustment nut.

POWER STEERING

CONTENTS

SPECIFICATIONS

SPECIAL TORQUES

STEERING CONTROL VALVE
- Body and cover . . . . . 24 - 30 N·m (18 - 22 ft-lbs)
- Valve body plug . . . . . 14 - 19 N·m (10 - 14 ft-lbs)
- Upper cover assembly . . . . . 20 - 26 N·m (15 - 19 ft-lbs)

STEERING CYLINDER
- Ball joint to cylinder arm nut . . . . . 109 - 176 N·m (80 - 130 ft-lbs)
- Cylinder clevis. . . . . 230 - 244 N·m (170 - 180 ft-lbs)

POWER STEERING

STEERING CONTROL ASSEMBLY

GENERAL

The power steering is hydraulically controlled at all times when adequate fluid is present. Control can be accomplished even though the hydraulic pump is not operating; however, increased input torque is required. The input torque will be less than 135 N·m (100 ft-lbs) when functioning properly.

The four-port and five-port steering assemblies are similar and all instructions cover both except where noted.

PRINCIPLES OF OPERATION

FOUR PORT STEERING ASSEMBLY: When the spool is in the center or neutral position, the hydraulic oil from the hydraulic pump circulates through the valve section, directly back to the reservoir with sufficient pressure only to overcome friction of valve channels and lines. There is no circulation of hydraulic pump oil to or from the cylinder. Note the center diagram of Fig. 1 showing neutral position on which no directional arrows appear in the metering channels. The oil pressure at the two cylinder ports is equal and produces ineffective forces in the cylinder.

FIVE PORT STEERING ASSEMBLY: When the spool is in the center or neutral position, the hydraulic oil from the hydraulic pump circulates through the valve section and total flow is directed to the auxiliary circuit. When a steering maneuver is accomplished, oil is directed to both the steering circuit and the auxiliary circuit, which are in parallel with each other, with flow priority given to the steering circuit. Only the oil flow used in the steering maneuver is exhausted through the return to the reservoir, and the quantity exhausted is dependent on the speed of steering. Note the center diagram of Fig. 2 showing neutral position on which no directional arrows appear in the metering channels. The oil pressure at the two cylinder ports is equal and produces ineffective forces in the cylinder.

In order to satisfy a power steering demand, the operator must rotate the steering wheel in the desired direction of the steering maneuver. The initial rotation of the steering wheel rotates the input shaft which rotates the drive line and rotor element through the torsion bar centering spring. Rotation of the rotor element and spool, which are coupled by the drive link, is resisted by the cylinder pressure required to overcome the steering forces. As the input shaft continues to rotate relative to the spool, the centering spring torsionally deflects. Axial movement of the spool is induced by the ball which is captive between the spool and the helical groove provided in the input shaft.

When the spool is displaced within the body, fluid channels are selected connecting the pump to the intake side of the rotor element with the commutator. The exhaust side of the rotor element is connected, through the commutator, to one side of the cylinder while the other side of the cylinder is connected to the reservoir without pressurizing the rotor section.

Further axial displacement of the spool results in increased working pressure to provide the level of pressure required to the limit of the relief valve. A portion of all of the hydraulic fluid at the required pressure from the engine-driven pump, depending upon the speed of steering, is directed to the cylinder via the metering section, with cylinder movement to accomplish the steering maneuver.

The fluid control valve section and a fluid rotor section are hydraulically and mechanically interconnected.

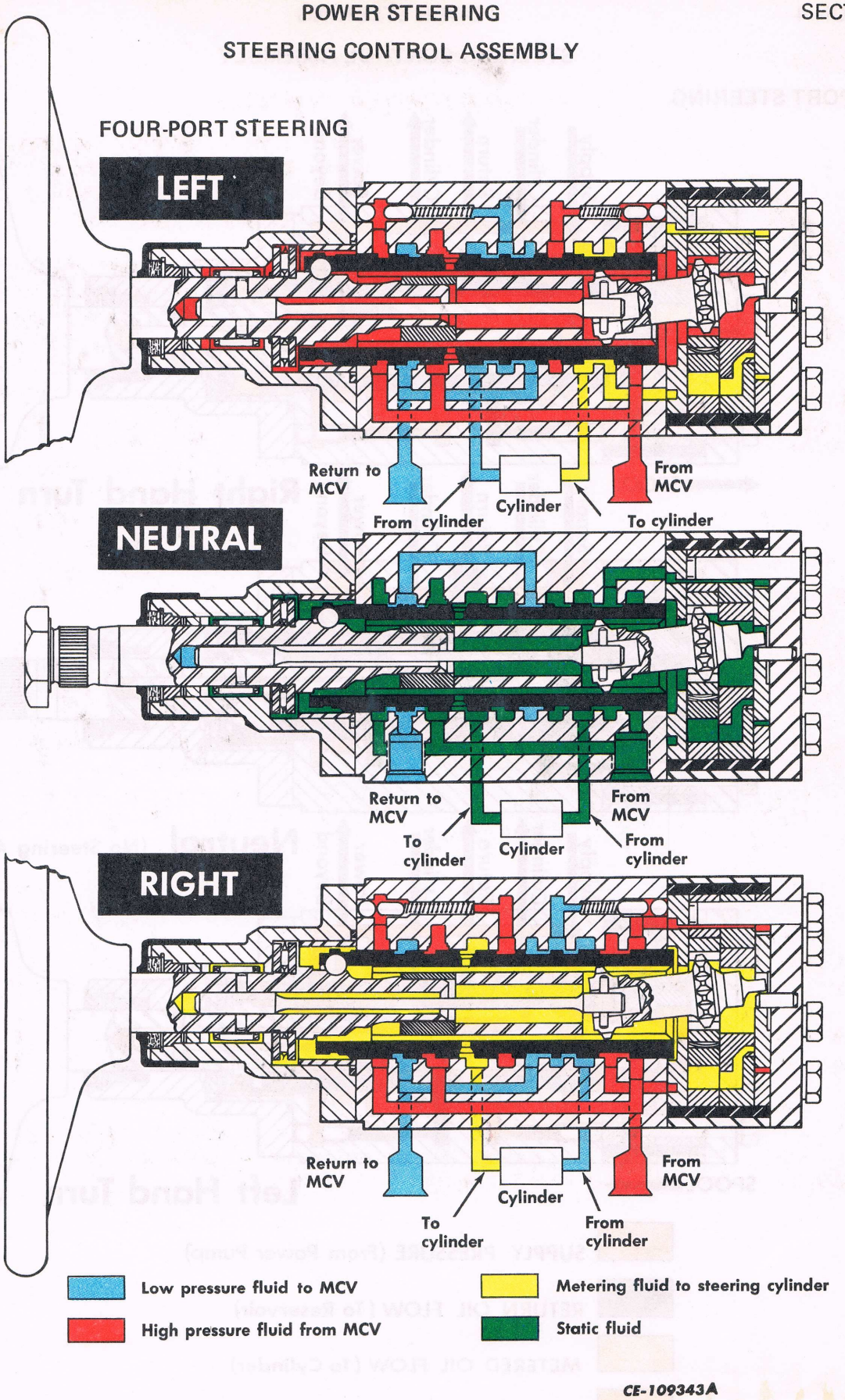

Fig. 1
Steering Assembly Oil Flow.

POWER STEERING

STEERING CONTROL ASSEMBLY

FIVE-PORT STEERING

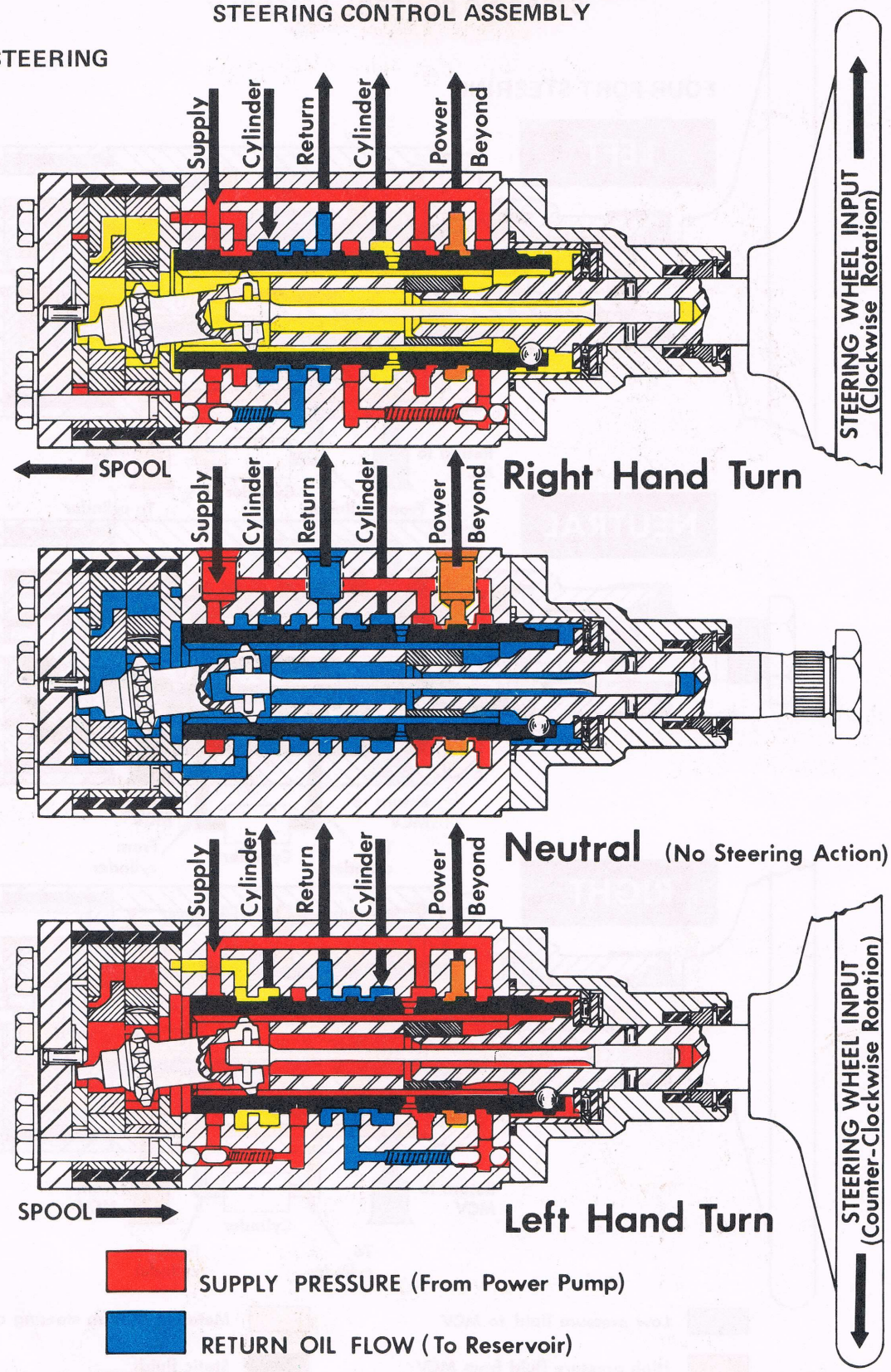

Fig. 2
Steering Assembly Oil Flow.

VALVE ELEMENT

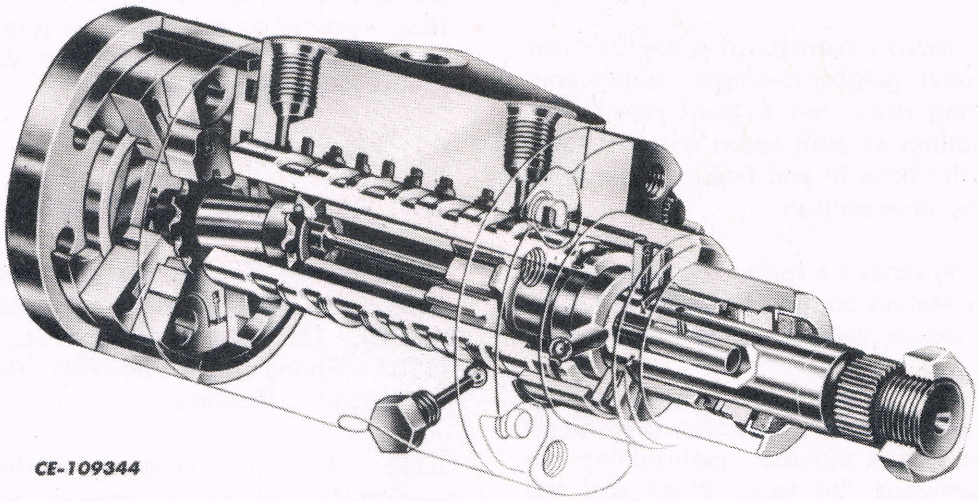

Fig. 3
Steering Cylinder Assembly.

The control valve section contains a mechanically actuated spool which is torsion bar centered and is of the open center type.

The function of the control valve section is to direct the fluid to and from the metering section, to and from the cylinder, and to regulate the pressure between supply and return ports. The valve is provided with pressure chambers which insure effective circuit isolation.

PUMPING ELEMENT

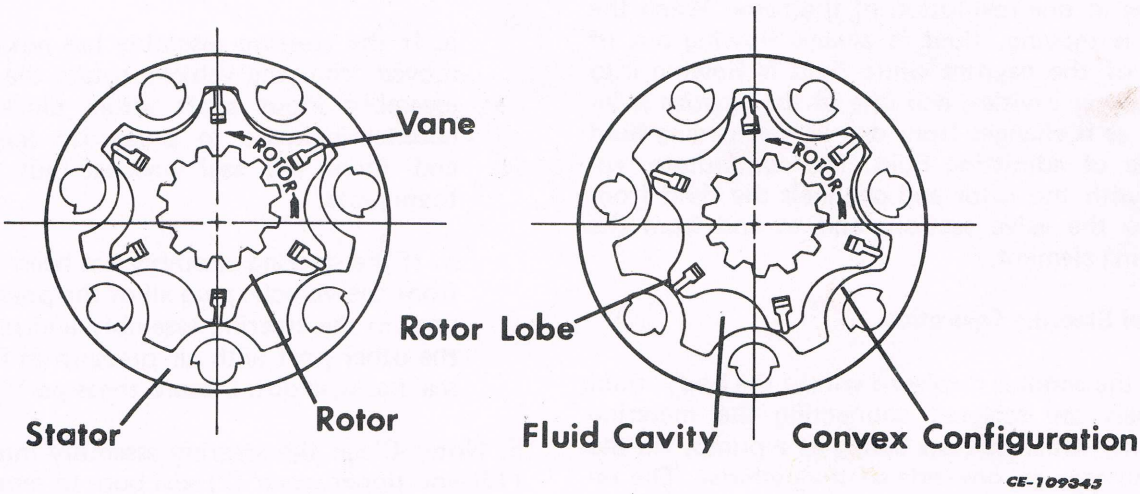

Fig. 4
Pumping Element.

PUMPING ELEMENT - Continued

Metering Section

The metering section consists of a commutator and bi-directional gerotor element, which contains an orbiting rotor and a fixed stator. The commutator rotates at orbit speed with the rotor and channels the fluid to and from the metering element and the valve section.

The rotor sealing vanes are spring and hydraulically forced into sealing contact between the rotor and stator to reduce leakage across the metering section.

The function of the metering section is to meter the oil to the power cylinder, maintaining the relationship between the hand wheel and the steered wheels. An additional function of the metering section is to act as a manually operated pump providing manual steering in the event of an inoperative hydraulic pump.

Rotor Operation in the Metering Element

Each lobe of the rotor has a diametrically opposite lobe; therefore, when one lobe is in a cavity, its opposite lobe is at the crest of the stator's convex form opposite the cavity. As the rotor is rotated, each lobe in sequence is moved out of its cavity to the crest of the stator's convex form and this forces each opposite lobe, in sequence, into a cavity. Due to the interaction between the rotor and the stator, there are 42 fluid discharging actions in one revolution of the rotor. When the rotor is moving, fluid is always flowing out of three of the cavities while fluid is flowing into three other cavities, and one of the cavities is inactive as it changes from one of discharging fluid to one of admitting fluid. The commutator rotates with the rotor and channels the fluid from and to the valve section, and to and from the metering element.

Manual Steering Operation

When the spool is displaced within the body, fluid channels are selected connecting the metering element, which is now acting as a pump, via the commutator to one side of the cylinder. The return flow from the other end of the cylinder is channeled through a recirculation valve so that the oil will flow to the intake side of the metering element via the commutator instead of back to the reservoir. The recirculation valve is a ball check valve in a channel connecting the return flow chamber to the hydraulic pump pressure inlet chamber. The recirculation valve is closed during power operation.

SEAL REPLACEMENT ASSEMBLY

For numerous installations, you may want to purchase the J26910 tool kit available from KENT MOORE, 1501 South Jackson St., Jackson, MI, 49203 - Phone (517) 784-8561. Refer to Fig. 5 for parts identification.

NOTE: It is not necessary to disassemble the steering assembly upper cover (7) to replaced the shaft seal.

1. Remove the steering wheel nut (1), steering wheel and steering wheel column, if applicable.

2. Remove the dirt seal (2) over the end of the steering assembly upper cover, if applicable. Discard this part.

3. Remove the retaining ring (3), do not discard. This part must be reinstalled during the assembly procedure.

4. Remove the seal package parts (4, and 5) from the steering assembly by one of the following methods:

   a. If the steering assembly has not been removed from the vehicle, rotate the steering assembly input shaft either clockwise or counterclockwise to pressurize the system and force the seal package out. Discard these parts.

   b. If the steering assembly has been removed from the vehicle, plug all of the ports except one, in the steering assembly and pressurize the other port with air pressure to force the seal package out. Discard these parts.

5. Note: Clean the steering assembly input shaft (16) and upper cover (7) seal bore to remove particles of dirt, felt, lint, etc. with a clean, lint-free rag. Caution: excessive particles of felt or lint can cause the new seal package to leak.

6. Cover the end of the steering assembly input shaft with cellophane tape to protect the new seal (5) when it is assembled over the sharp edges of the input shaft.

7. Lubricate and install the new seal (5) with the lip side first, onto the steering assembly input shaft.

8. Remove the cellophane tape from the steering assembly input shaft.

9. Assemble the new washer (4), with small end first, onto the steering assembly input shaft and push the new washer and the new seal (5), previously installed, down into the steering assembly upper cover. (A short piece of metal tubing 15/16 minimum I.D. x 1-3/16 maximum O.D. or a 7/8 deep well socket may be used to push these parts into place.)

10. Assemble the previously used retaining ring (3) onto the steering assembly input shaft and down into the steering assembly upper cover groove. Be sure the rounded edge of the retaining ring (3) is faced inward.

11. Assemble the new seal (5) onto the steering assembly input shaft and down into the steering assembly upper cover (7) counterbore.

12. Assemble the steering column, if applicable.

13. Assemble the steering wheel and wheel nut. Torque the wheel nut to 48 N·m (35 ft-lbs).

SERVICING THE STEERING ASSEMBLY

Refer to Fig. 5 for parts identification.

The spool (22) and the housing (25), the commutator (34), and commutator ring (33), the rotor (31B) and the stator (31A) are not serviced separately because they are selectively fitted at the factory. If the spool or body needs replacement, the complete steering assembly must be replaced. If the commutator or the commutator ring needs replacement, both must be replaced as a matched set. If the rotor or stator needs replacement, the complete rotor set (31) must be replaced. The pin in the end cover is not serviced separately. If the pin or end cover needs replacement, the end cover and pin assembly (38) must be replaced.

POWER STEERING
STEERING CONTROL ASSEMBLY

DISASSEMBLY

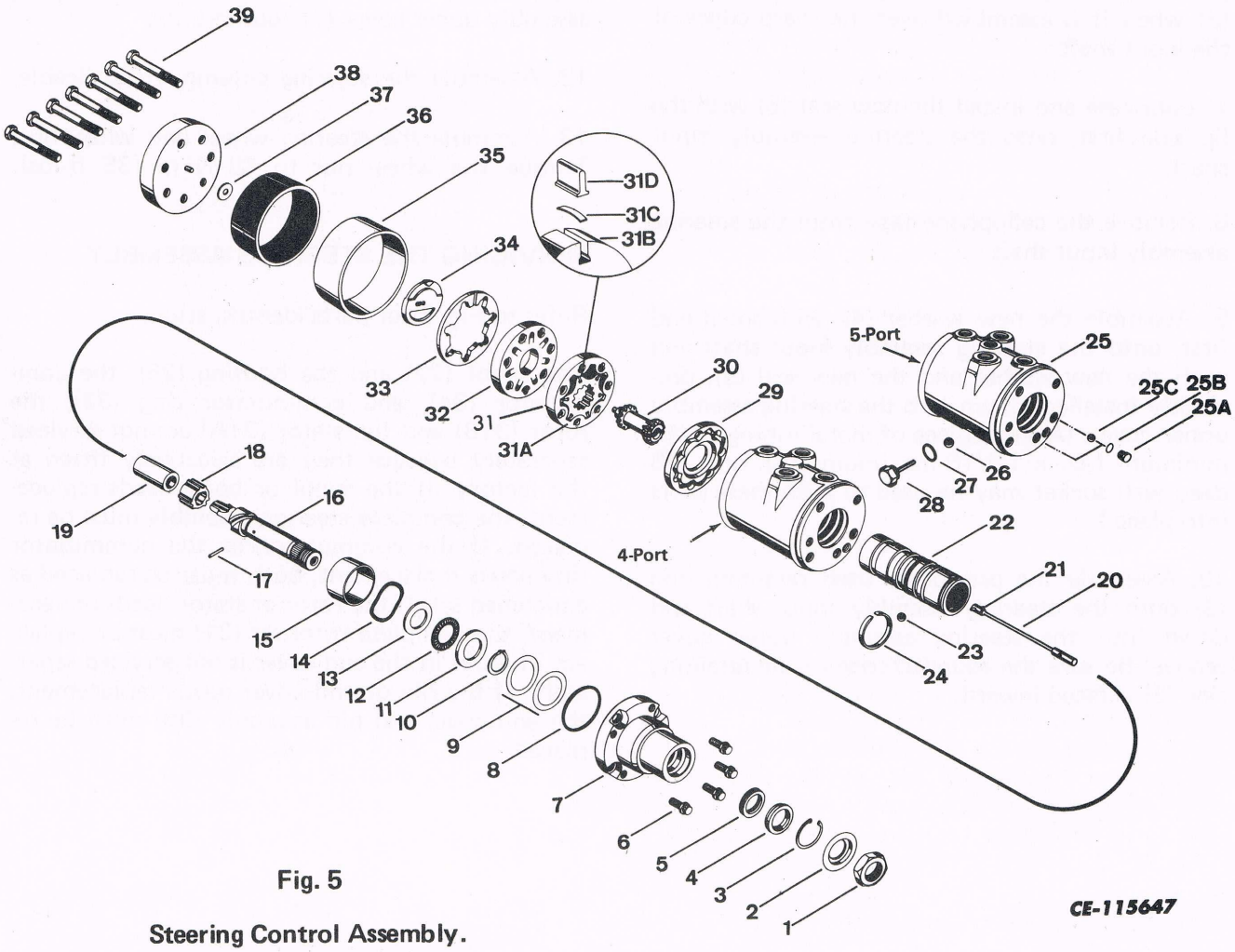

Fig. 5

Steering Control Assembly.

Legend for Fig. 5

1. Steering wheel nut
2. Seal
3. Retaining ring
4. Back-up washer
5. Seal
6. Screw
7. Upper cover
8. "O"ring
9. Shim
10. Retaining ring
11. Thrust washer
12. Thrust bearing
13. Thrust washer
14. Wave washer
15. Spacer
16. Input shaft
17. Needle roller
18. Drive ring
19. Spacer
20. Torsion bar
21. Needle roller
22. Spool
23. Ball
24. Spring
25. Housing assembly
25A. Plug
25B. "O"ring
25C. Ball
26. Ball
27. "O"ring
28. Plug
29. Spacer
30. Drive link
31. Rotor set
31A. Stator
31B. Rotor
31C. Spring
31D. Van
32. Manifold
33. Commutator ring
34. Commutator
35. Seal retainer
36. Rotor seal
37. Washer
38. End cover
39. Special bolt

STEERING CONTROL ASSEMBLY

Cleanliness in servicing this power steering assembly is absolutely necessary.

When disassembling any part of the unit, make sure that a clean work bench or table is used. (A piece of clean wrapping paper makes an excellent disposable top.)

Outside dirt should be cleaned off before disconnecting lines and port holes should be plugged immediately after disconnecting lines.

When disassembled, parts should be cleaned only in Hy-Tran fluid (other solvents may cause deterioration of the rubber seals) and blown dry with clean, dry air. Avoid wiping parts with a cloth and never steam clean the hydraulic steering assembly components.

Plug the port holes and clean the exterior of the unit thoroughly. Then remove the plugs.

1. Remove the dirt seal (2) and discard it.

2. To prevent possible distortion or damage to the unit if placed directly in a vise, the following procedure should be used: Insert an "O" ring tube fitting with tube nut or fitting cap attached, into one of the threaded ports in the housing. Clamp the fitting in a vise in a manner which will locate the seven end cover bolts in an upright position. (See Fig. 6).

3. Unscrew the seven special bolts (39) from the end cover (38).

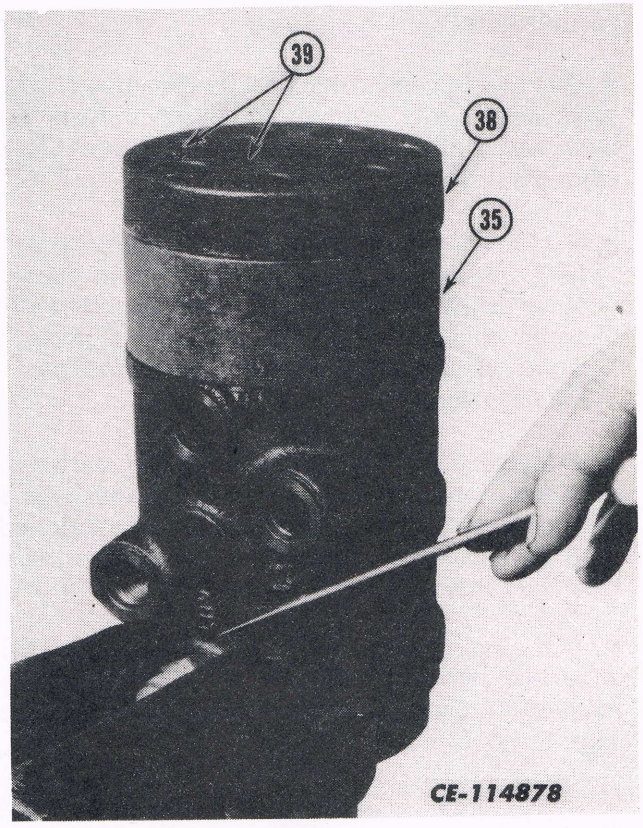

Fig. 6
Steering Unit Housing.

NOTE: *Special care should be used in the following steps to insure protection of the ground and lapped faces of the components. Avoid scratching or nicking of the finished surfaces. See Figs. 5 and 6.*

DISASSEMBLY - Continued

4. Remove the end cover (38) by bumping it sideways with a soft hammer to loosen it from the rotor seal (36) and seal retainer (35), and lift it from the unit.

NOTE: *The washer (37) and commutator (34) may adhere to the end cover, and may be removed with the end cover. Do not attempt to remove the pin because it is press fitted in the plate and is non-serviceable. (See Fig. 5 and 6).*

5. Remove the rotor seal (36) and the seal retainer (35) by bumping the retainer sideways with a soft hammer to loosen it from the valve body and then lift off the rotor seal and seal retainer. Discard the rotor seal. See Figs. 5 and 6.

6. If the wear washer (37) and commutator (34) were not removed with the end cover (38), remove these parts from the steering assembly. See Figs. 5 and 7.

Fig. 7
Steering Unit Housing.

7. Remove the commutator ring (33) from the manifold (32), by a sliding and lifting motion. Care should be used in the handling of this fragile component. See Figs. 5 and 7.

8. Remove the manifold (32) from the rotor set (31) by a sliding and lifting motion. (See Fig. 5.

9. Remove the rotor set (31), spacer (29) and drive link (30) as an assembly by grasping the spacer and removing the assembly with a sliding and lifting motion. See Figs. 5 and 8.

10. Separate the drive link (30) by sliding the rotor set (31) on the spacer (29), allowing the drive link teeth to clear the spacer hole. Remove the drive link and separate the rotor set from the spacer. Use extreme caution to keep vanes (31D)

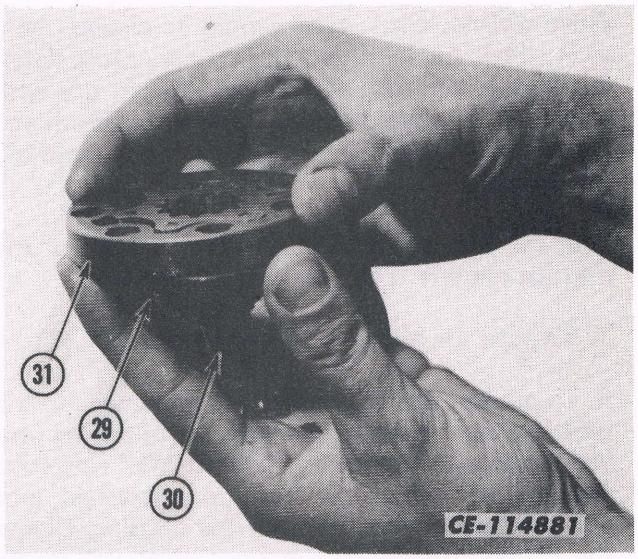

Fig. 8
Removing the Rotor Set.

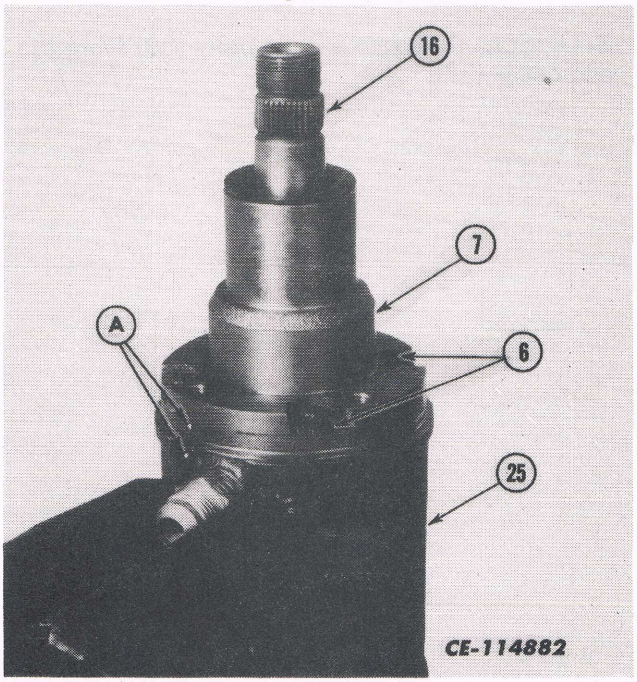

Fig. 9
Removing the Upper Cover.

and springs (31C) from falling out. When handling the rotor set, pressure should be applied to the rotor (31B) by gripping the rotor set between the fingers and urging the rotor into contact with the stator (31A). See Figs. 5 and 8.

Carefully protect against damage to side faces.

NOTE: *The rotor (31B) and the stator (31A) must be kept in a matched set. See Fig. 5.*

11. Reverse the steering unit in the vise to place the input shaft (16) in a vertical position. Using a prick or center punch, mark the upper cover flange (A) in relation to a similar mark placed on the port face of the housing (25) to facilitate reassembly. See Figs. 5 and 9.

12. Remove the four special cap screws (6) by using a 5/16 inch, 12-point socket. See Figs. 5 and 9.

13. Grasp the input shaft (16), and with a smooth upward motion, remove the input shaft (16), upper cover (7) and spool (22) assembly from the housing (25).

NOTE: *Avoid applying side forces to the spool which would cause binding of the closely fitted assembly. Never use excessive force to remove the spool from the body. See Figs. 5 and 9.*

14. Remove and discard the "O" ring (8). See Fig. 5.

15. Remove the upper cover (7) with shaft seal package (3 thru 5) intact. Remove the spacer (15). See Fig. 5.

16. Remove the shims (9) from either the upper cover (7) cavity or from the face of the thrust washer (11). Count and record the number of shims to aid in the reassembly of the unit.

17. Remove the retaining ring (3), using snap ring pliers. Remove and discard the back-up washer (4). Remove and discard the seal (5). See Fig. 5.

18. Remove the retaining ring (10), thrust washer (11), thrust bearing (12), thrust washer (13) and wave washer (14) from the input shaft (16). See Fig. 5.

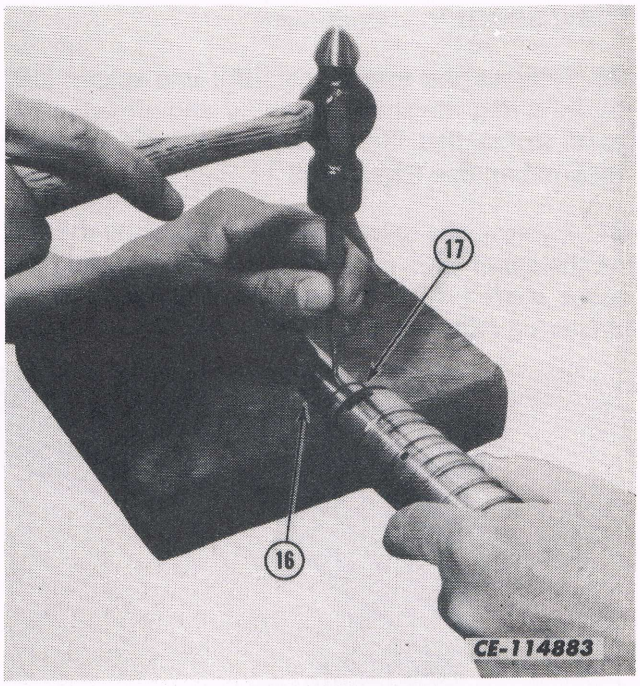

Fig. 10
Removing the Needle Roller.

19. Remove the needle roller (17) by using a pin punch of 2.1 mm (.120 in) max. diameter for a minimum of 15.9 mm (.625 in) length. The input shaft (16) should be placed on a block of wood (to avoid shaft damage) and the needle pin removed by impact, using light hammer blows. See Figs. 5 and 10.

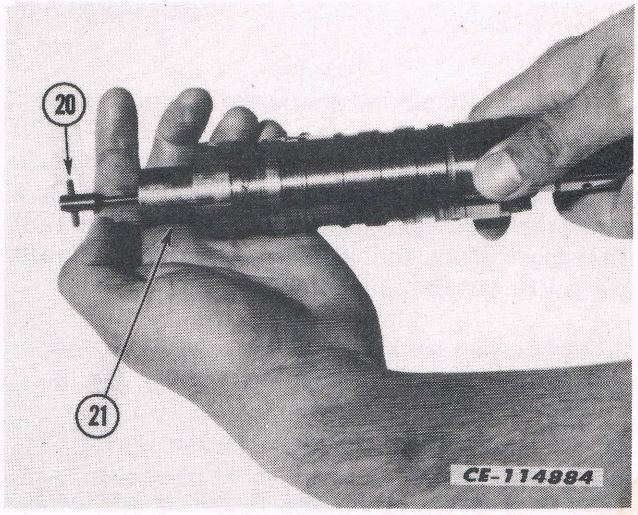

Fig. 11
Removing the Torsion Bar.

DISASSEMBLY - Continued

20. Remove the torsion bar (20) and spacer (19) by inverting the spool assembly and allowing the parts to fall free. Do not remove the pin from the torsion bar. See Figs. 5 and 11.

21. Remove the drive ring (18) by placing the end of the spool (22) on a table surface, rotating the input shaft (16) the extremes of travel until the drive ring falls free. See Figs. 5 and 12.

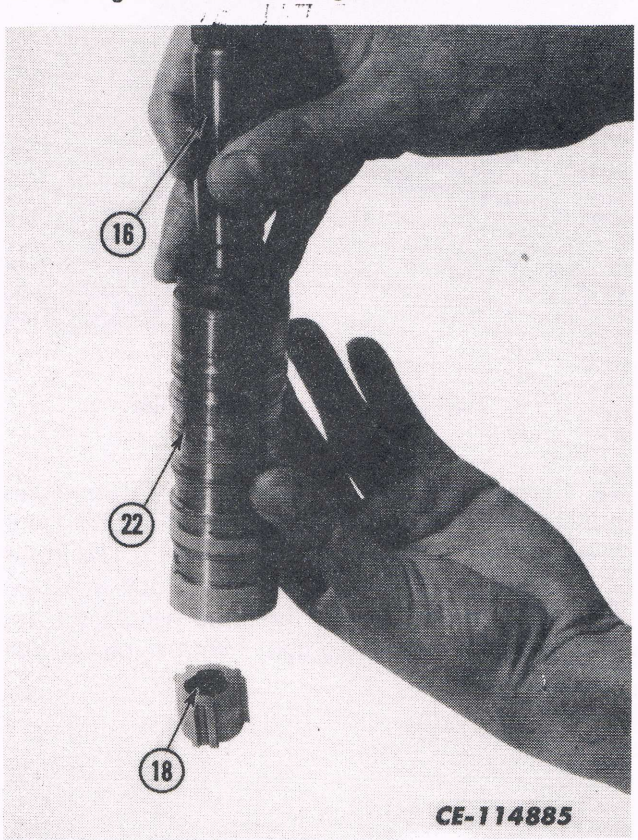

Fig. 12
Removing the Drive Ring.

22. With the spool assembly in the same position as the step above, rotate the input shaft (16) in a clockwise direction until the actuator ball (23) disengages from the helical groove in the input shaft. Lift out the input shaft.

NOTE: *The actuator ball may fall free. Care should be used to not lose it. See Fig. 5.*

23. Do not remove the ball retainer spring (24) unless replacement is required. If necessary to remove this spring, grasp the flattened end of retainer spring with pliers and lift the flattened end over the shoulder on the spool (22). Continue with a pulling motion, to progressively remove the retainer spring. See Figs. 5 and 12.

A screwdriver may be used to assist in the prying of the spring over the shoulder of the spool. Care must be used to avoid scratching or nicking of the spool outside diameter and control edges.

(The following standard procedure is optional).

24. Return to the housing (25) which is mounted in the vise. Remove the plug and roll pin assembly (28). A steel ball is captivated by the plug and roll pin assembly. Care must be used to avoid the loss of the ball. Remove ball by shaking after housing is removed from the vise. Discard "O" ring (27). See Fig. 5.

This completes the disassembly of the steering unit.

INSPECTION AND REPAIR

Visually inspect all parts and replace the ones that are not in good condition. The following finished surfaces should be inspected for abnormal wear, scoring or damage. For items 1 through 10, see Fig. 5.

1. Housing (25) bore and ends.

2. Valve spool (22) outside diameter. Some burnishing due to use may be observed.

3. Valve spool (22) control edges.

4. Valve spool (22) splines.

5. In the input shaft (16) seal area, check for rust, pitting and excessive wear. Light circumferential polishing due to seal contact may be observed.

6. In the input shaft (16) helical groove, note the contact pattern created by the actuator ball (23). The surface should be free from pits chipping or surface breakdown.

7. Check the thrust bearing (12). Inspect for pitting of rolls and faces of thrust washers (11 and 13).

8. Drive link (30) pin slot. Width of slot must not exceed .025 mm (.001 inch) difference at any point in its length.

9. Drive link (30) teeth.

10. Torsion bar and needle roller assembly (20). Difference in diameter of needle roller (21) should not exceed .025 mm (.001 inch).

The following parts may show a polish pattern due to the rotor action and the circular motion of the commutator. The sides of these components are ground and lapped and should be free from nicks, burrs and scoring. For items 1 throu 5, see Fig. 5.

1. Spacer (29).

2. Manifold (32).

3. Rotor (31B).

4. Commutator (34). Note: Thickness difference between commutator and commutator ring (33) shall not exceed .038 mm (.0015 inch).

5. End cover and pin assembly (38).

The rotor set (31) requires special attention in handling to avoid nicks and scratching. It is recommended that the rotor (31B), stator (31A), vanes (31D) and springs (31C) be checked in the assembled condition. To inspect the rotor set, place the assembly face down on the lapped face of the end cover (38) and check the freedom of rotor rotation within the stator. The action of the spring loaded vanes should move freely in their slots, without bind, due to the forces of the springs. See Figs. 5 and 13.

Using a tapered blade feeler gauge, check the rotor (31B) to the stator (31A) clearance as shown in Fig. 14. If there is more than a .178 mm (.007 inch) clearance, the rotor set (31) must be replaced. See Figs. 5 and 14.

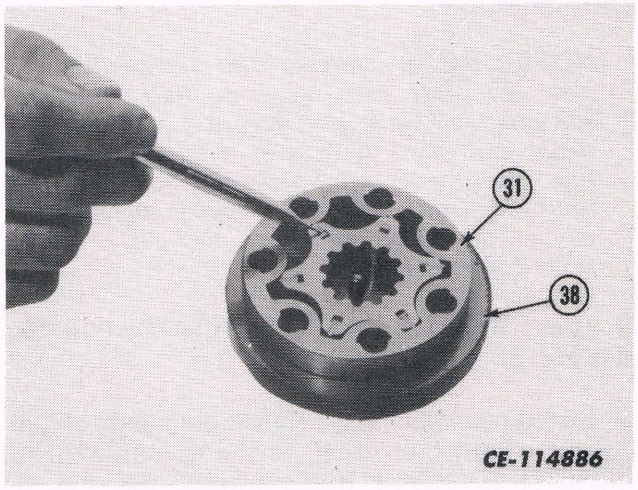

Fig. 13
Checking the Rotor Set.

Carefully lift the rotor set assembly (31) from the end cover (38) and measure the thickness of the rotor (31B) and stator (31A). Thickness difference between the rotor and stator must not exceed .051 mm (.002 inch). See Figs. 5 and 14.

The internal splines in the rotor should not show abnormal wear or damage.

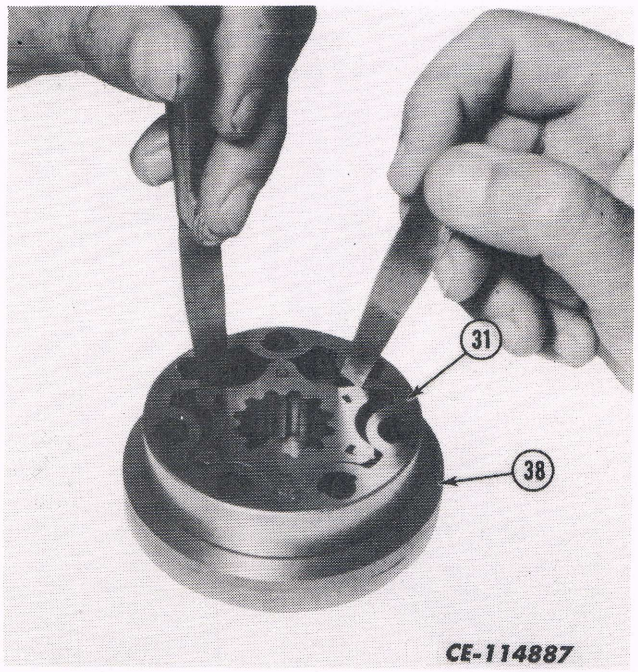

Fig. 14
Checking Rotor Clearance.

REASSEMBLY

NOTE: *Before starting the reassembly, clean all parts with Hy-Tran fluid (other solvents may cause deterioration of rubber seals) and air dry. Do not wipe dry with rags. Be sure all dried paint lips have been removed from edges of lapped surfaces. Unless otherwise indicated, DO NOT oil parts before assembly.*

1. Insert ball (26) into its cavity in the housing. See Fig. 5.

2. Install new "O" ring (27) on plug and roll-pin assembly (28) and install in the housing (25) to 14-19 N·m (10-14 ft-lbs) torque. See Fig. 5.

3. Reclamp housing (25) in the vise as shown in Fig. 9.

4. Assemble thrust washer (13), thrust bearing (12), thrust washer (11) and retaining ring (10) on input shaft (16). See Fig. 5.

5. If the retaining spring (24) has been removed, install a new retaining spring. See Fig. 5.

6. Insert actuator ball (23) into ball seat located inside spool (22). See Fig. 5.

7. Assemble wave washer (14) over thrust washer (13) and thrust bearing (12). Insert the input shaft (16) into the spool, engaging the helix and ball with a counterclockwise motion. This operation is best done while holding the spool in a horizontal position. See Fig. 5.

8. Using the mid-section of the torsion bar (20) as a gauge, insert the gauge between the spool end and the thrust washer (13). See Figs. 5 and 15.

9. Place the input shaft (16) and spool (22) assembly in a vertical position, with the shaft end on the table surface. See Fig. 5.

10. Insert the drive ring (18) into the spool (22) end by visually aligning an internal space on the drive ring with a tooth on the input shaft (16) spline, and allow the drive ring to drop to the limit of its travel. If the drive ring does not engage the input shaft spline, a slight rotation of the input shaft will allow the drive ring to become fully engaged. Remove torsion bar (20) gauge. See Figs. 5 and 16.

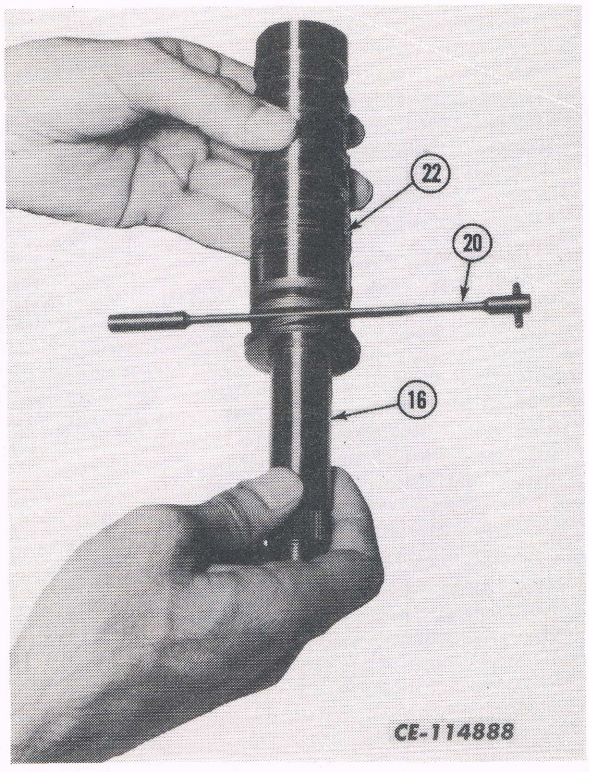

Fig. 15
Using Torsion Bas As Gauge.

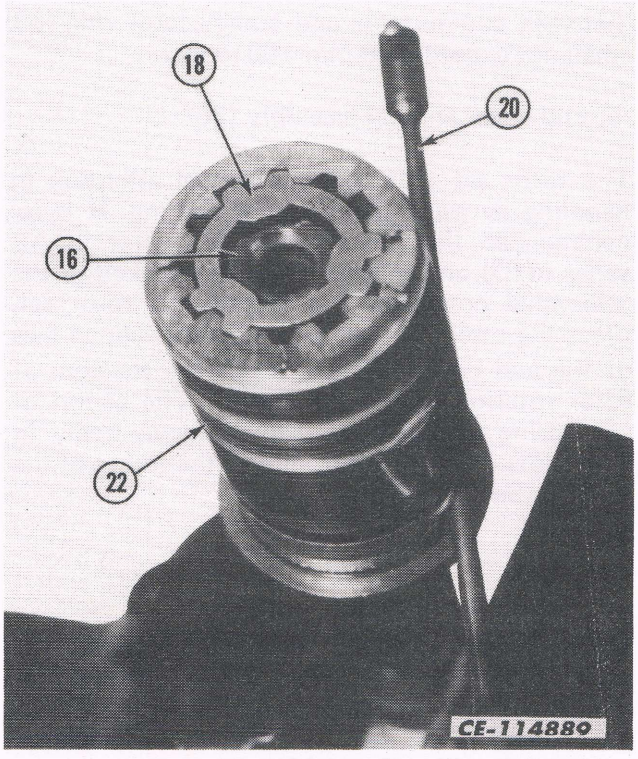

Fig. 16
Instering the Drive Ring.

11. Install spacer (19) over torsion bar (20) and insert the assembly into the spool (22) end. See Figs. 5 and 16.

12. Align the cross-hole in the torsion bar (20) with the cross-hole in the input shaft (16) and insert a 3.1 mm (.120 inch) diameter punch to maintain alignment.

13. Insert the needle roller (17) into cross-hole in input shaft (16) , while retracting the punch.

14. Initially press the needle roller (17) into the torsion bar (20) with a few light taps. Press needle roller flush with outside diameter of input shaft (16) using a 1/2" drive socket (40) for supporting the input shaft. With a few light taps on the 3.1 mm (.120 inch) diameter punch, drive the needle roller (17) approximately 7.9 mm (1/32 inch) below the input shaft (16) O.D. See Figs. 5 and 17.

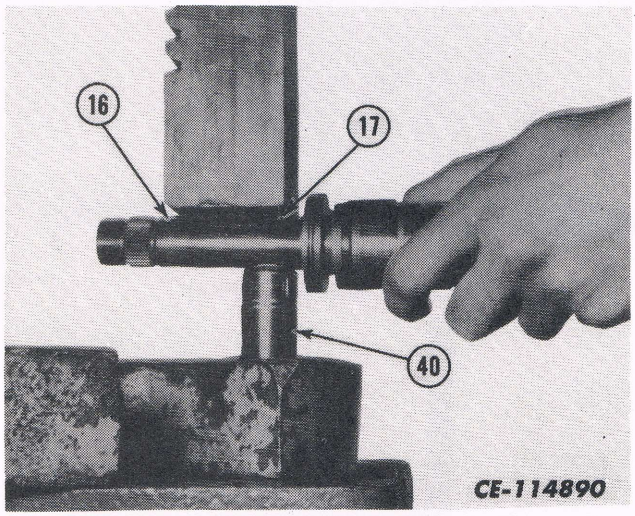

Fig. 17
Installing the Needle Idler.

15. Slip the spacer (15) over the spool and place the spool assembly into body.

> **NOTE:** *Avoid applying side forces to the spool which would cause binding of the closely fitted assembly. See Fig. 5.*

16A. NOTE: If neither the input shaft (16) or upper cover (7) is replaced, the original shims (9) may be reused. However, if in the inspection of parts, damage is found to the shims, discard these shims and replace with new ones of equal thickness. See Figs. 5 and 18.

Place the shims on tip of the thrust washer (11). Coat the "O" ring (8) with clean grease and place it in the upper cover (7) counterbore. Assemble upper cover onto input shaft (16) and rotate to align punch marks previously made during disassembly.

> **NOTE:** *If a new upper cover is used, no angular orientation is required. However, it is necessary to align the upper cover and housing (25).*

Replace the four screws (6) finger tight and then tighten a pilot ring or a worm drive type hose clamp (41) around the upper cover flange and the body pilot diameter to achieve the required alignment. Now tighten the screws to 24-30 N·m (18-22 ft-lbs) torque. See Fig. 18.

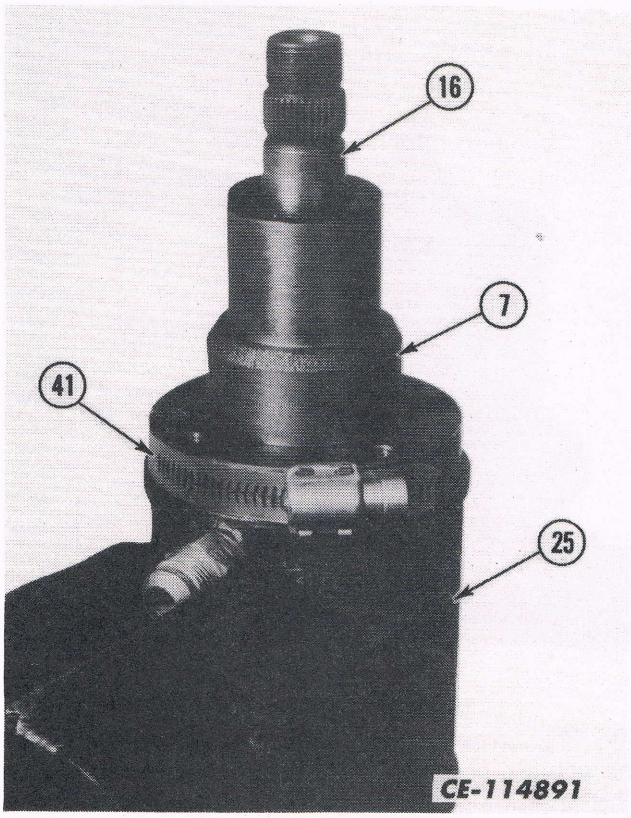

Fig. 18
Replacing the Upper Cover.

16B. NOTE: If the input shaft (16), upper cover (7) or both have been replaced, the following procedure for shimming must be used:

Reassemble as in 16A, using the required new parts. After torquing the four screws (6), revolve the unit in the vise so that the input shaft is

REASSEMBLY - Continued

pointing downward. To determine that the unit is shimmed correctly, the drive link (30) must be in its proper position. To do this, grasp the input shaft (16), pull downward, and prevent rotation. Engage the drive link splines in the spool (22) and rotate to position spool flush with the end of the housing (25). Remove the drive link and orient the drive link slot to engage torsion bar needle roller (21) and reinsert drive link. Observe relationship of spool end to body. If this is within .064 mm (.0025 inch) of being flush, no additional shimming is required. If not within .064 mm (.0025 inch), add or remove shims (9) until this requirement is satisfied repeating assembly steps as outlined in 16A above.

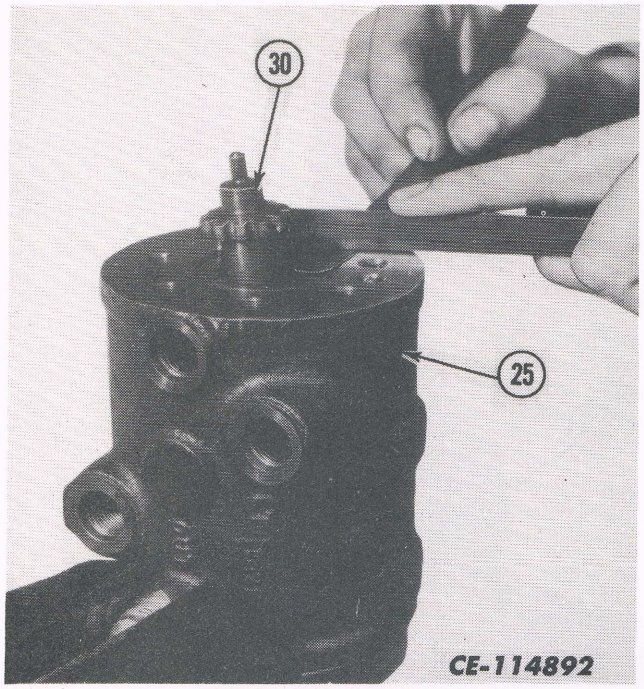

Fig. 19
Checking Shimming.

16C.The correct shimming must be checked on the vehicle or on a suitable hydraulic test stand. The amount of steering effort required to steer the vehicle when the vehicle is at rest on dry pavement must be equal within .35 N·mm (2 in-lbs). For example, if 15 inch pounds is required to steer to the right, not less than 13 or more than 17 inch pounds should be required to steer to the left.

If a test stand is available to place a load between cylinder ports in the same manner as on the vehicle, a test stand may be used. Add shims to increase steering efforts in a left turn, subtract shims to increase steering effort in a right turn.

17. With the drive link (30) installed as described above, assemble two assembly posts (42) into the housing (25) as shown in Fig. 20. These assembly posts can be made by simply cutting the heads off of two bolts similar to the special bolts (39). See Figs. 5 and 20.

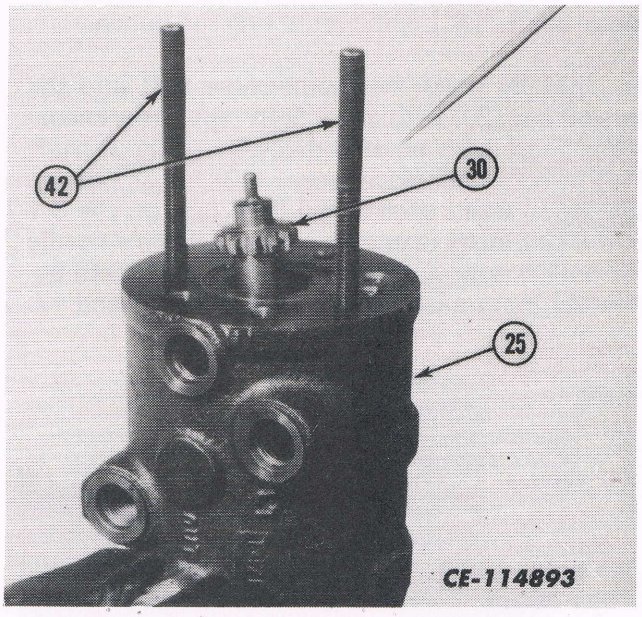

Fig. 20
Installing Assembly Post.

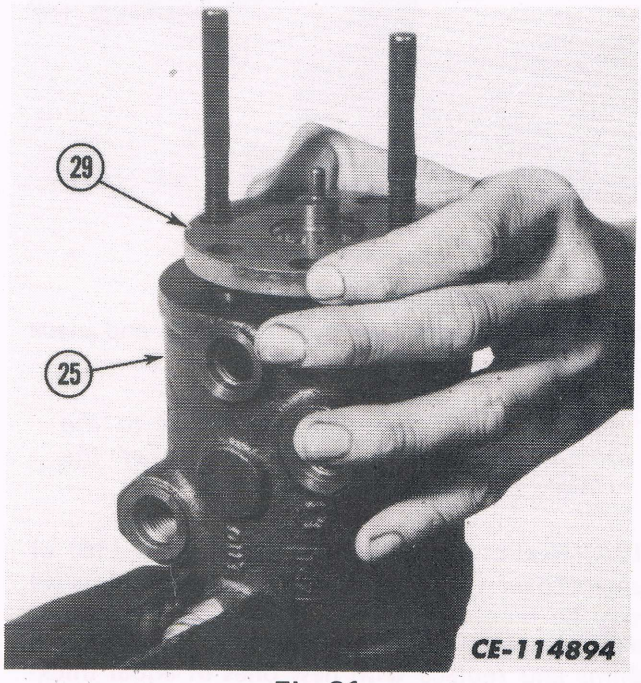

Fig. 21
Installing the Spacer Plate.

18. Assemble the spacer plate (29) over the assembly posts and onto the housing (25) with the plain side up. See Fig. 21.

19. Install the rotor set (31) over the assembly posts and onto the spacer plate (29).

NOTE: *One of the seven holes in the rotor set may be smaller than the other six holes. Position this hole, if applicable, over one of the assembly posts.*

NOTE: *All the vane springs (31C) must be down in their slots with no part of the spring protruding out of either side of the rotor set. See Figs. 5 and 22.*

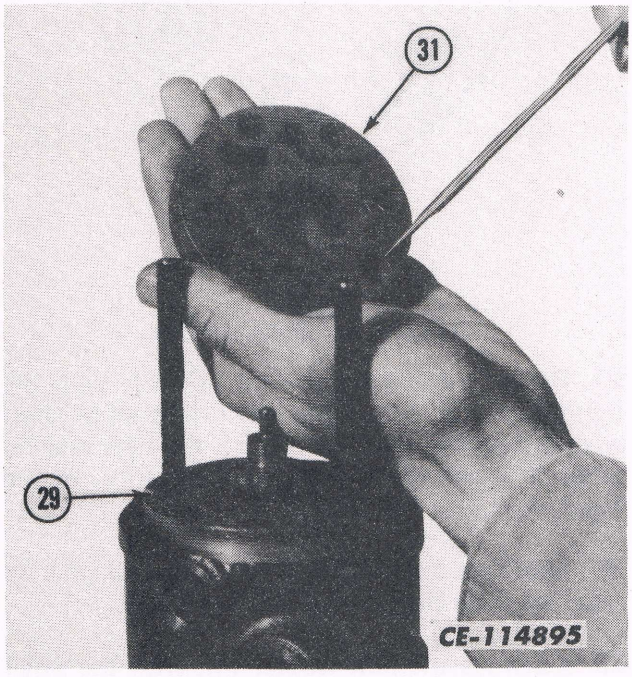

Fig. 22
Installing the Rotor Set.

20. Install the manifold (32) over the assembly posts and onto the rotor set (31). Make sure the circular slot side of the manifold is up. See Fig. 23.

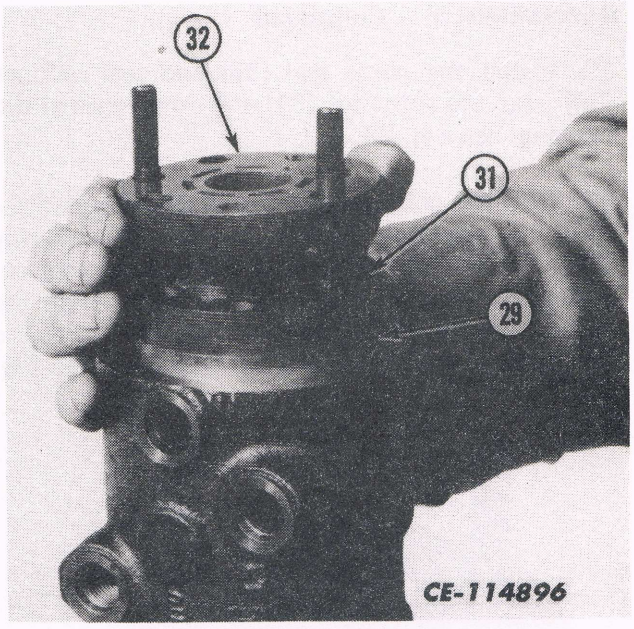

Fig. 23
Installing the Manifold.

21. Install the commutator ring (33) over the assembly posts and onto the manifold (32). Make sure the slot side "A" is down. See Fig. 24.

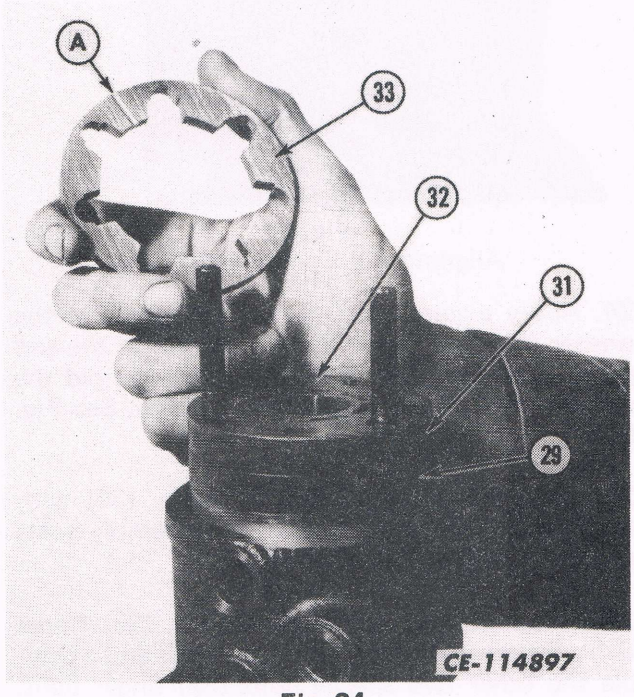

Fig. 24
Installing the Commutator Ring.

REASSEMBLY - Continued

22. Install the rotor seal (36) and seal retainer (35) over the rotor set (31) and down against the housing. See Fig. 25.

23. With the counterbore side of the commutator (34) up, assemble it into the commutator ring (33) with the slotted hole in the commutator engaging the nose of the drive link (30). Align the commutator outside diameter concentric with the inside diameter of the commutator ring. See Fig. 25.

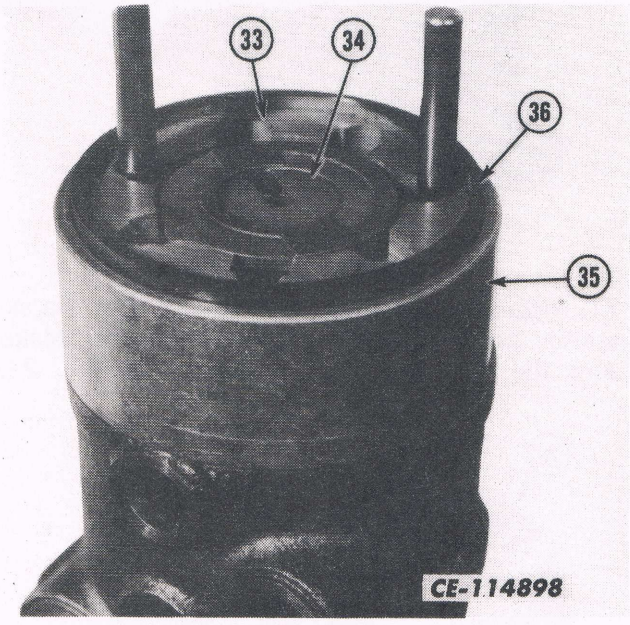

Fig. 25
Aligning the Commutator Ring.

24. Apply a small amount of clean grease to the washer (37) and install it over the pin in the end cover assembly (38). The grease should hold the washer (37) to the end cover assembly. See Fig. 5.

25. Assemble the end cover assembly (38) with the washer (37) attached over the assembly posts and onto steering unit. See Fig. 5.

26. Install five of the special bolts (39) finger tight. Remove the two assembly posts and assemble the other two special bolts (39) finger tight.

NOTE: *Finish tightening the seven special bolts per steps 1 and 2 as follows and do not over torque them; it will cause irrepairable damage:*

a. Torque all seven of the special bolts to 2.7-4.1 N·m (2-3 ft-lbs) in the sequence shown in Fig. 26.

b. Torque all seven of the special bolts to 20-26 N·m (15-19 ft-lbs) in the sequence shown in Fig. 26.

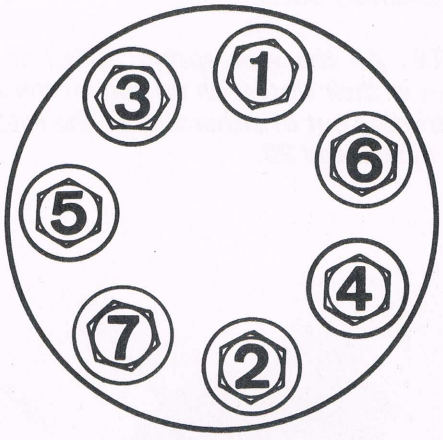

Fig. 26
Torque the Special Bolts.

27. Relocate the steering unit in a vise with the input shaft up. Cover the end of the input shaft with cellophane tape, to protect the new seal (5) when it is assembled over the sharp edges of the input shaft. See Fig. 5.

28. Lubricate and install the new seal (5) with lip side first onto the input shaft. See Fig. 5.

29. Assemble the new washer (4), with the small end first, onto the input shaft and push the new washer and new seal down into the upper cover (7). (A short piece of metal tubing, 24 mm (15/16 in) minimum I.D. x 30 mm (1-3/16 in) maximum O.D. or a 22 mm (7/8 in) deep well socket may be used to push these parts into place.) See Fig. 5.

30. Assemble the retaining ring (3) into the upper cover (7) groove. Be sure the rounded edge of the retaining ring is faced inward. See Fig. 5.

31. Assemble the new dirt seal (2) into the upper cover (7) counterbore. See Fig. 5.

32. NOTE: If the steering unit is to be stored, plug the cylinder ports and fill the inlet port with clean oil. Rotate the input shaft until the oil appears at the outlet port.

33. Plug the port holes to prevent dirt entering. This completes the assembly of the steering assembly.

STEERING CYLINDER

REMOVAL

1. Disconnect the cylinder hoses (3) at cylinder (2). Cap the hoses and plug the cylinder ports.

2. Remove nut (1) and the pin securing the other end of cylinder (2) and remove the cylinder.

3. Remove the ball joint from piston rod.

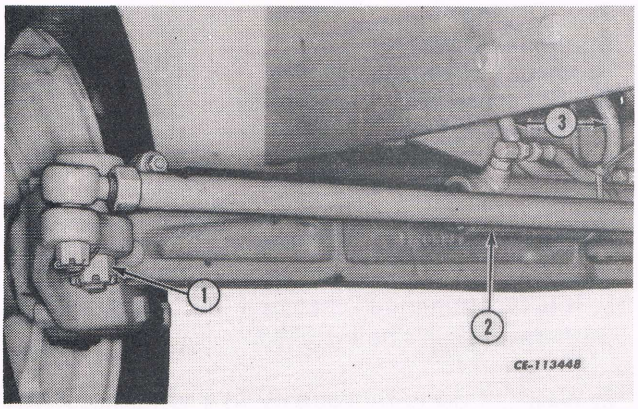

Fig. 27
Removing the Steering Cylinder.
1. Slotted hex nut. 2. Steering cylinder.
3. Cylinder hoses.

DISASSEMBLY

1. Clean the outside of the cylinder assembly.

2. Remove the elbow fitting from the cylinder head port.

3. Remove set screw (10) and lock washer from the cylinder housing. See Fig. 29.

4. Place the cylinder in a soft jawed vise as shown in Fig. 28.

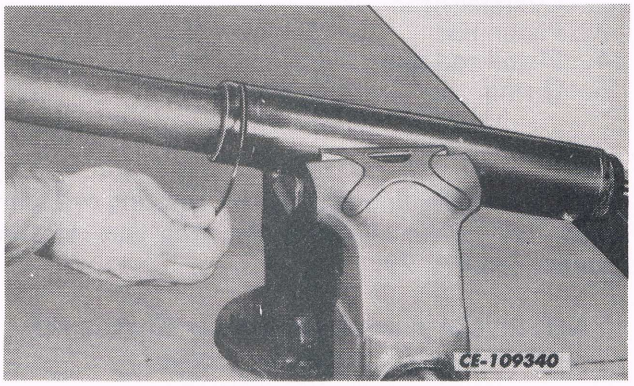

Fig. 28
Cylinder in a Soft-Jawed Vice.

DISASSEMBLY - Continued

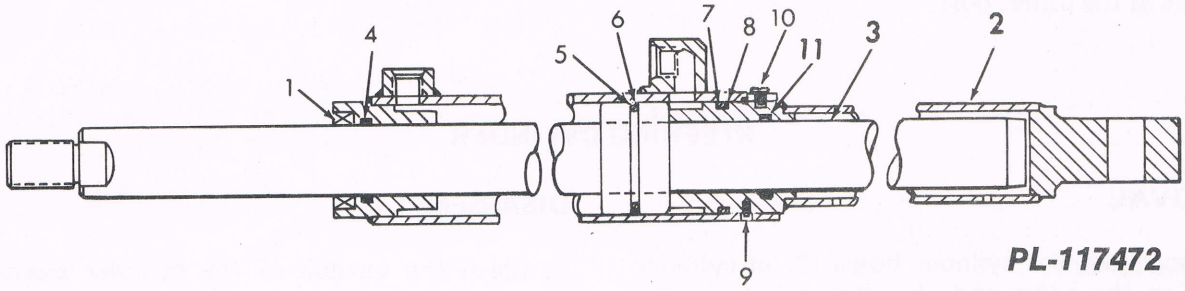

Fig. 29
Steering Cylinder Assembly.

1. Rod wiper seal
2. Cylinder head
3. Piston rod
4. Piston rod seal
5. O-ring
6. Piston ring
7. "O"ring
8. Back-up washer
9. Front head retainer ring
10. Set screw with lock washer
11. Piston rod seal

5. Remove retaining ring (9) by rotating cylinder head (2) while working the ring out of the groove. See Fig. 29.

NOTE: *Use a small screwdriver to start the retaining ring (9) out of the groove.*

6. Pull the cylinder head (2) out of the cylinder housing. See Fig. 29.

7. Pull the piston rod (3) out of the cylinder housing. See Fig. 29.

8. Remove the piston seal (6) and "O" ring (5) from the piston. See Fig. 29.

9. Remove the "O" ring (7), back-up washer (8) and seal (11) from the cylinder head (15). See Fig. 29.

10. Remove the seals (1 and 4) from the cylinder housing. See Fig. 29.

INSPECTION AND REPAIR

1. It is recommended that new "O" rings, back-up washers and seals be installed.

2. Wash all parts thoroughly in a suitable solvent. Dry them thoroughly with compressed air, or a clean cloth. Lubricate machined surfaces of usable parts to protect them.

3. Inspect the cylinder housing for roundness throughout its length. If a tight spot is noticed when removing the piston, the area of binding should be given particular attention. A cylinder that is out-of-round should be replaced.

4. Check the cylinder housing and piston rod for scratches or grooves. Shallow scratches can be polished out with fine emery cloth and oil so a smooth surface is presented to the seals.

5. Inspect all sealing ring grooves for scratches, burrs or other damage. "Dress-up" grooves or replace as necessary.

REASSEMBLY

1. Install the seal (4) in the cylinder housing so the seal lips face toward the inside of the cylinder. See Fig. 29.

2. Install the seal (1) in the cylinder housing bore. See Fig. 29.

3. Install the seal (11) in the cylinder head so that the seal lips face toward the inside of the cylinder. See Fig. 29.

4. Install the back-up washer (8) and "O" ring (7) on the cylinder head (2) so that the back-up washer is towards the outside of the cylinder. See Fig. 29.

5. Apply a small amount of hydraulic oil to the groove in the piston and install "O" ring (5). Soak the seal ring (6) in water heated to 83 - 104° C (180 - 220° F) Until it is pliable and then install it over the "O" ring (5). See Fig. 29.

6. Insert the piston rod (3) into the cylinder housing, threaded end first. See Fig. 29.

7. Insert the cylinder head (2) into the cylinder housing until the retaining ring groove in the head aligns with the retaining ring hole in the housing. See Fig. 29.

8. Secure the cylinder in the vise as shown in Fig. 28. Hook the retaining ring (9) in the head (2) and work it into the cylinder housing by turning the head. See Fig. 29.

9. Turn the head (2) until the set screw hole in the cylinder housing aligns with the notch in the head. Install the screw (10) with lock washer and torque to 3-4 N· m (2-3 ft-lbs). See Fig. 29.

INSTALLATION

1. Fully retract the cylinder and assemble the cylinder ball joint until 798.8 ± 0.8 mm (31.45 ± 0.03 in) is obtained between the centerline of the cylinder pivot hole and the centerline of the ball joint stud. Secure the ball joint with the locking hardware.

2. Secure the cylinder eye to the axle with the clevis pin and cotter pin.

3. Secure the cylinder ball joint to the steering arm and torque the nut to 109-176 N·m (80-130 ft-lbs) and secure with the cotter pin. Do not back off the nut to index the cotter pin.

4. Reconnect cylinder hose. (See 3, Fig. 27).

CONTENTS

REMOVAL

1. Raise the loader (if equipped) and support it with a safety bar (1). See Fig. 1.

2. Drain the coolant from the radiator and shut off the fuel at the fuel tank.

3. Remove the hood assembly and rear side panels.

4. Remove the muffler (vertical) or disconnect the underslung exhaust manifold.

5. Disconnect the battery ground cable.

6. Disconnect the tachometer cable from the engine and move it to the rear.

7. Disconnect and remove the inlet and outlet radiator hoses from the engine.

8. Remove the air cleaner inlet duct.

9. Remove the plastic straps from the power steering and oil cooler lines.

10. Remove the nut securing the steering tubes front bracket to the radiator.

11. Disconnect the two power steering tubes.

12. Disconnect the two oil cooler tubes (1, Fig. 2). Plug all lines and fittings.

Fig. 1

1. Safety bar

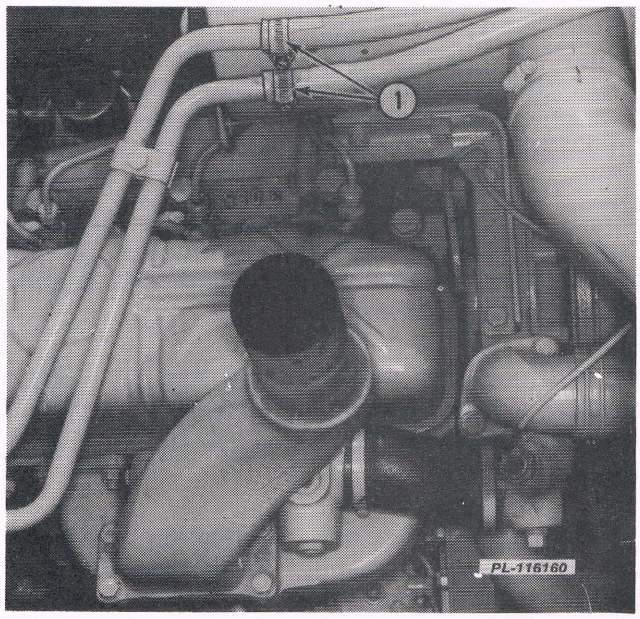

Fig. 2
Removing the Oil Coder Tubes.
1. Oil cooler tubes

REMOVAL - Continued

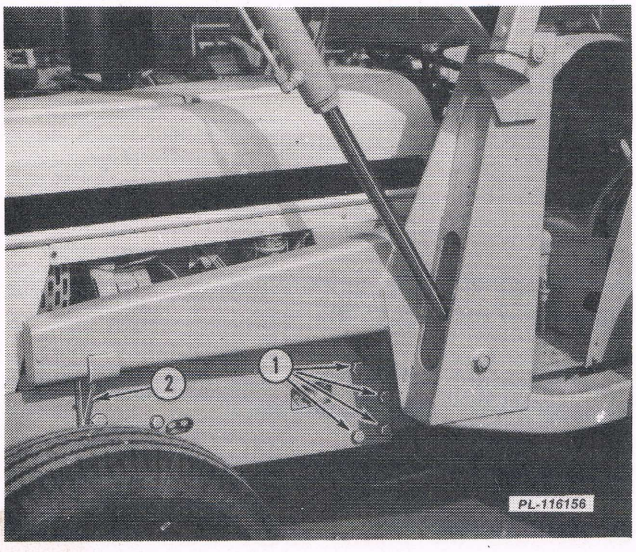

Fig. 3
Removing Mounting Brackets and Capscrews.
1. Cap screws 2. Front mounting bracket

13. Support the loader frame (if equipped with stands and the clutch housing with a suitable jack.

> **NOTE:** *If the tractor is not equipped with a loader, splitting stands FES 142-1 can be attached to the clutch housing to support the rear frame.*

14. Install two lifting eyes PLT-700-4 in the front bolster. Support the front end with two slings PLT-120-1 and a suitable hoist.

15. If equipped with a loader, remove the front mounting brackets (2). Remove the cap screws (1) securing the rear of the frame rails to the clutch housing. See Fig. 3.

16. Disconnect the wires at the cranking motor solenoid (2). Remove the wiring harness (3) from the clips and move the harness to the rear. See Fig. 4.

17. Remove the cap screws securing the front bolster to the engine. Remove the air baffle plate. Pull the front end away from the engine.

18. Disconnect the fuel shut off (1) cable at the injection pump. See Fig. 4.

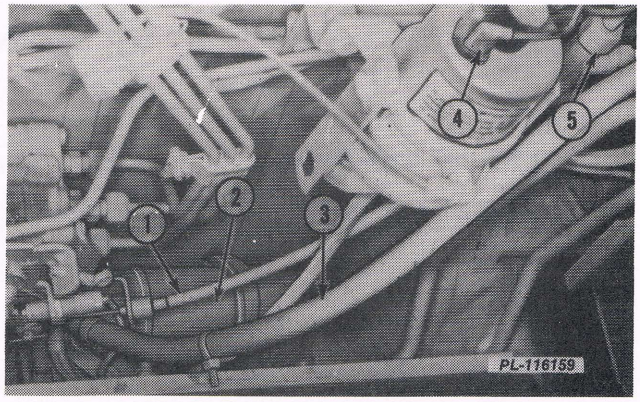

Fig. 4
Left Side of Engine.
1. Fuel shut off cable
2. Cranking motor solenoid
3. Wiring harness
4. Wire to ether injector
5. Fuel return "T"

19. Disconnect the wire to the ether injector (4). Disconnect the fuel return line at the "T" (5) and plug and cap the lines. See Fig. 4.

20. Disconnect the throttle rod on the right side of the engine at the rear.

21. Disconnect the oil pressure sending wire (1). Disconnect the fuel inlet tube (2) at the filter. See Fig. 5.

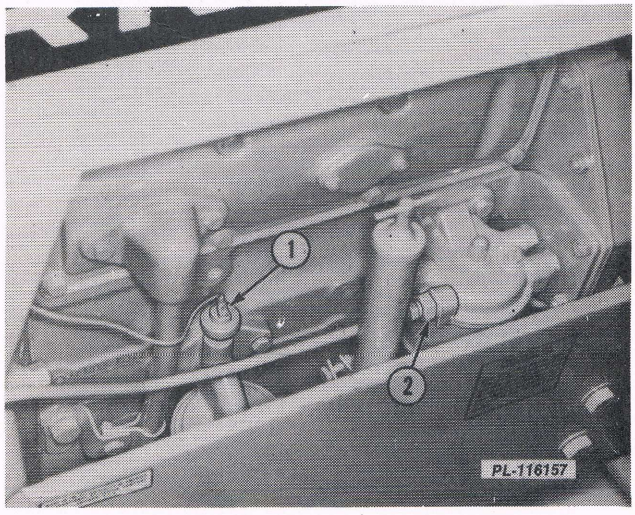

Fig. 5
Right Side of Engine.
1. Oil pressure sending wire 2. Fuel inlet tube

22. Disconnect the water temperature sensing bulb at the thermostat housing.

Torque Converter Transmission: Place alignment marks on the flex plate (1) and torque converter, then remove the six bolts connecting the torque converter to the flex plate. See Fig. 6.

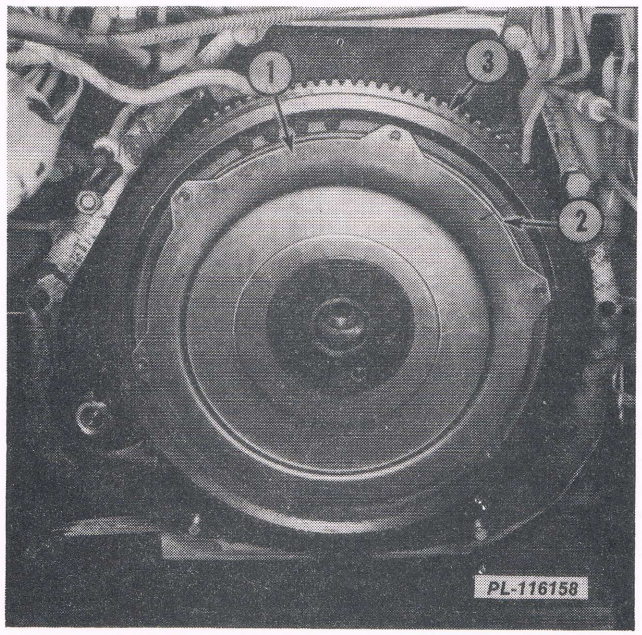

Fig. 6
Removing the Flex Plate.

1. Flex plate
2. Alignment mark
3. Flywheel

23. Install two PLT-103-4 lifting brackets to two cylinder head bolts. Support the engine using a PLT-120-1 sling and a suitable hoist.

24. Remove the two cap screws and install the two aligning dowels PLT-120-1. Remove the remaining cap screws securing the engine to the clutch housing and pull the engine away from the housing.

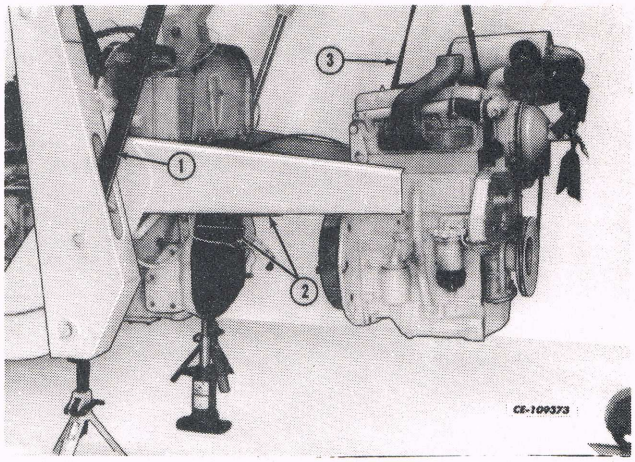

Fig. 7
Removing the Engine
(Typical Illustration)

1. Safety bar
2. Aligning dowels, PLT-700-1
3. Sling, PLT-120-1

INSTALLATION

Installation is basically the reverse of the removal procedure.

Synchromesh Transmission: Before installing the engine, remove the clutch and position it on the transmission input shaft. Disconnect the linkage from the clutch release shaft. Then install the engine and secure the clutch assembly to the flywheel working through the inspection opening. If flywheel and clutch plate balancing marks are indicated (dab of white paint), they must be aligned.

Torque Converter Transmission: Place the torque converter unit on the transmission before installing the engine.

Hydrostatic Transmission: Install the flex plate on the engine before installing the engine.

CONTENTS

REMOVAL AND INSTALLATION

1. Remove the engine. Refer to Section 5.

2. Remove the back plate and driven member from the flywheel.

NOTE: *The driven member is marked for the flywheel side. This would be the side where the hub is welded. If incorrectly assembled, the anti-rattle springs will contact the capscrews.*

3. Align the driven member, back plate and pilot bearing, utilizing a universal clutch tool or old clutch shaft.

4. Install all six mounting bolts on the three block plate legs; only snug and then torque them down in a crosshatch sequence to insure even torque on the pressure plate (see NOTE). Do not torque in a complete clockwise or counterclockwise sequence.

NOTE: *As the bolts are tightened, the shipping block on the three release fingers should be released. If any remain, remove and discard them.*

5. Install the engine. Refer to Section 5.

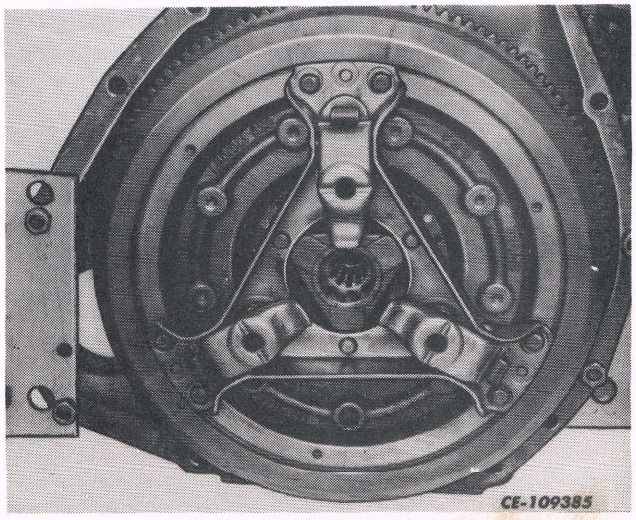

Fig. 1
Clutch Pressure Plate Cover Assembly.

ENGINE CLUTCH AND FLYWHEEL
CLUTCH ADJUSTMENT

FREE PEDAL ADJUSTMENT

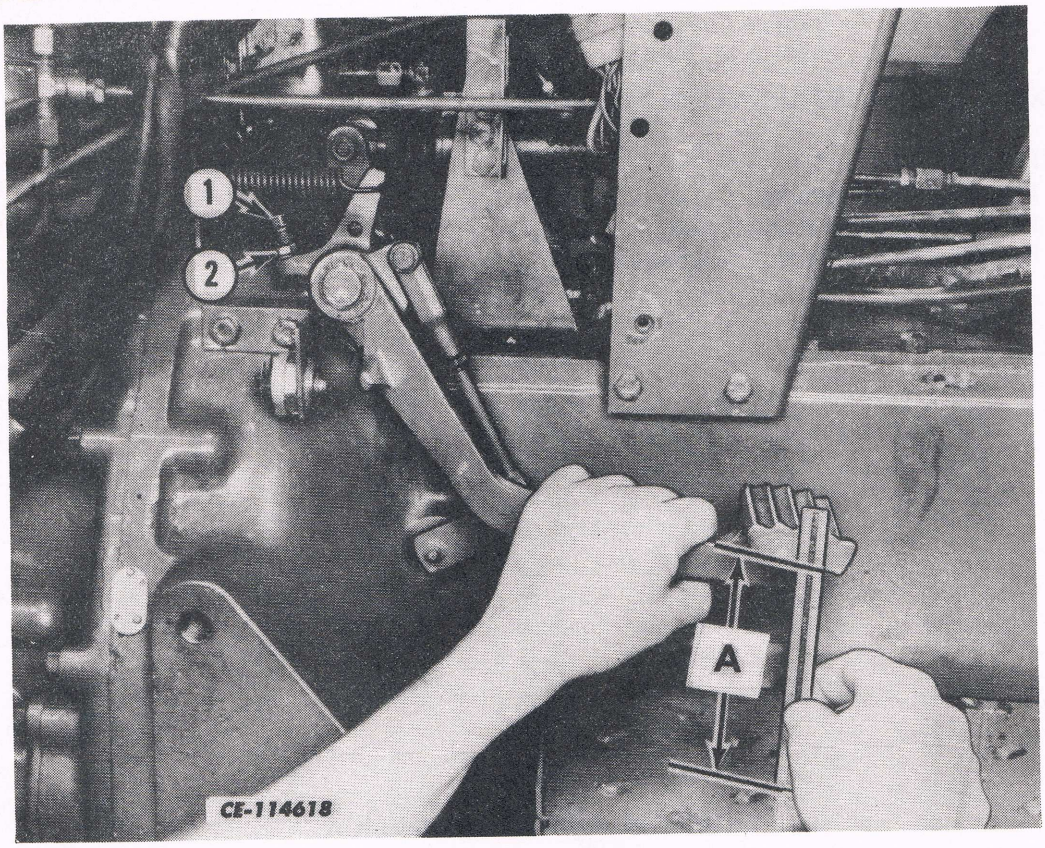

Fig. 2
Clutch Pedal.
1. Adjusting screw 2. Lock nut

1. Using the adjusting screw (1), set the free travel height at 140 mm (5.5 in) at "A", measured from the plateform to the bottom of the clutch pedal.

2. Adjust the clevis (D) so that there is 44.5 mm (1-3/4 inch) travel on the pedal.

   NOTE: *After repeated adjustments, a minimum free pedal travel of 25 mm (1 inch) is acceptable.*

3. Tighten the lock nut (C).

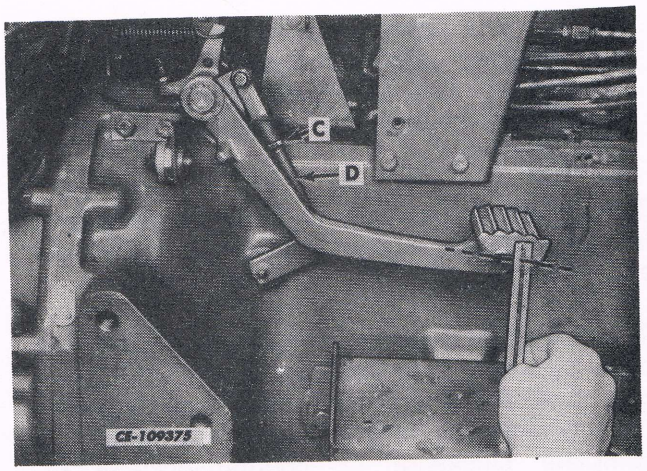

Fig. 3
Adjusting the Clutch Pedal for Free Travel.

NEUTRAL STARTING SWITCH ADJUSTMENT

With the clutch pedal in the fully disengaged position, adjust switch plunger (3, Fig. 4) so that it is depressed 2.5 mm (0.10 inch). Tighten the nuts (2) to lock switch in position.

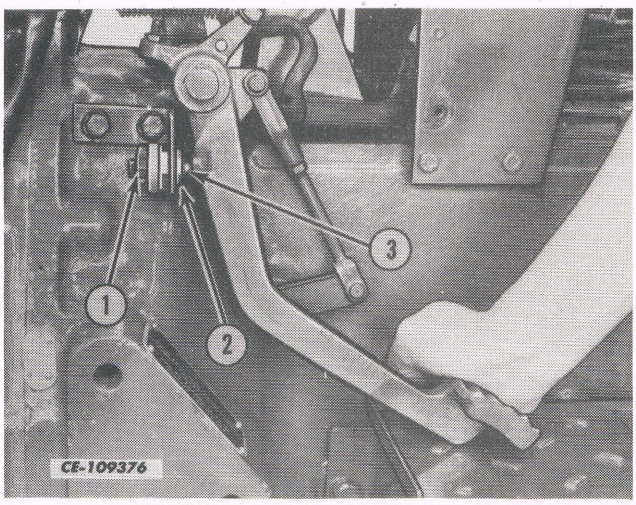

Fig. 4
Adjusting Neutral Starting Switch.

1. Switch 2. Lock nut 3. Plunger

CONTENTS

RADIATOR

Removal

1. Drain the coolant from the radiator.

2. Remove the hood and side sheets.

3. Remove the grille. Disconnect the necessary electrical leads to the head lights.

4. Disconnect and cap the oil cooler lines.

5. Remove the upper and lower radiator hoses.

6. Disconnect the fan shroud from the radiator.

7. Remove the necessary mounting bolts and remove the radiator.

Installation

Install the radiator in the reverse order of removal.

CONTENTS

FUEL TANK

Removal

1. If equipped with a Roll-Over Protective Frame (ROPS), remove the frame.

a. Using a suitable hoise and sling, support the protective frame.

b. Loosen the necessary mounting bolts.

c. Disconnect the necessary wiring harness.

d. If the tractor is equipped with a front loader, support the loader near the axle housing using two safety stands, one on each side of the tractor.

e. Shut off the fuel and disconnect the necessary fuel lines.

f. Remove the protective frame.

g. Remove the necessary control handle knobs.

h. Remove the fuel tank and fender assembly.

Installation

Reassemble in the reverse order of removal.

CONTENTS

GENERAL

A 12-volt, negatively ground electrical system is used consisting of a lighting system and a starting system.

The head lights and rear lights are the sealed-beam type and are controlled by the light switch on the instrument panel.

A fuse box is located behind the dash. It contains two fuses. It is important to use the same capacity fuse for replacement.

As a guide for identifying the various electrical units and for tracing the electrical cables and connections, refer to the wiring diagram in this section.

For Delco-Remy part number and specifications of the cranking motor and alternator, refer to "SPECIFICATIONS" in this section. For detailed instructions on repair, test and adjustment of these components, refer to Delco-Remy Service Manual, Form No. 1.2. Delco-Remy manuals may be purchased from:

United Motors Service
Division of General Motors Corp.
Detroit, Michigan

Precautions

When installing the battery, be sure to connect the ground cable to the negative (–) terminal.

Do not short across or ground the alternator terminals. Do not attempt to polarize the alternator. Never disconnect the alternator or battery while the alternator is in operation. Failure to observe these precautions will result in damage to the harness or alternator.

Be sure to disconnect the ground cable from the battery before any electrical work is done.

Surfaces under terminals must be clean and good electrical connection must be established after assembly. All clips must grip cables tightly to prevent vibration and rapid cable wear. All clips and straps must be closed in a workmanlike manner so as not to injure the insulation.

SPECIFICATIONS

Special Torques

Alternator:	
Pulley nut	28 - 48 N·m (20 - 35 lbf-ft)
Top adjusting bolt and nut	11 - 14 N·m (8 - 10 lbf-ft)
Bottom pivot bolt and nut	21 - 28 N·m (15 - 20 lbf-ft)
Battery:	
Positive and negative terminal nuts	8.5 - 11.0 N·m (75 - 100 lbf-in)
Hold down bolt nut	1.7 - 2.0 N·m (15 - 18 lbf-in)
Cranking motor solenoid:	
"S" terminal nut	1.4 - 1.9 N·m (12 - 17 lbf-in)
"R" terminal nut	1.9 - 3.3 N·m (16 - 30 lbf-in)
Battery terminal nut	7 - 13 N·m (5 - 10 lbf-ft)
Mounting bolt	45 - 50 N·m (33 - 37 lbf-ft)
Flashing warning light mounting nut	2.3 - 2.8 N·m (20 - 25 lbf-in)
Fuel tank sending unit mounting bolts	2.0 - 2.2 N·m (18 - 20 lbf-in)
Gauges:	
Clamp mounting nut	0.6 - 0.9 N·m (5 - 8 lbf-in)
Charge indicator terminal nut	0.6 - 0.9 N·m (5 - 8 lbf-in)
Fuel gauge terminal nut	0.6 - 0.9 N·m (5 - 8 lbf-in)
Tachometer:	
Clamp mounting nut	0.9 - 1.3 N·m (8 - 12 lbf-in)
Terminal nut	0.6 - 0.9 N·m (5 - 8 lbf-in)
Transmission oil pressure switch terminal nut	1.7 - 2.2 N·m (15 - 20 lbf-in)

ELECTRICAL SYSTEM

WIRING DIAGRAM

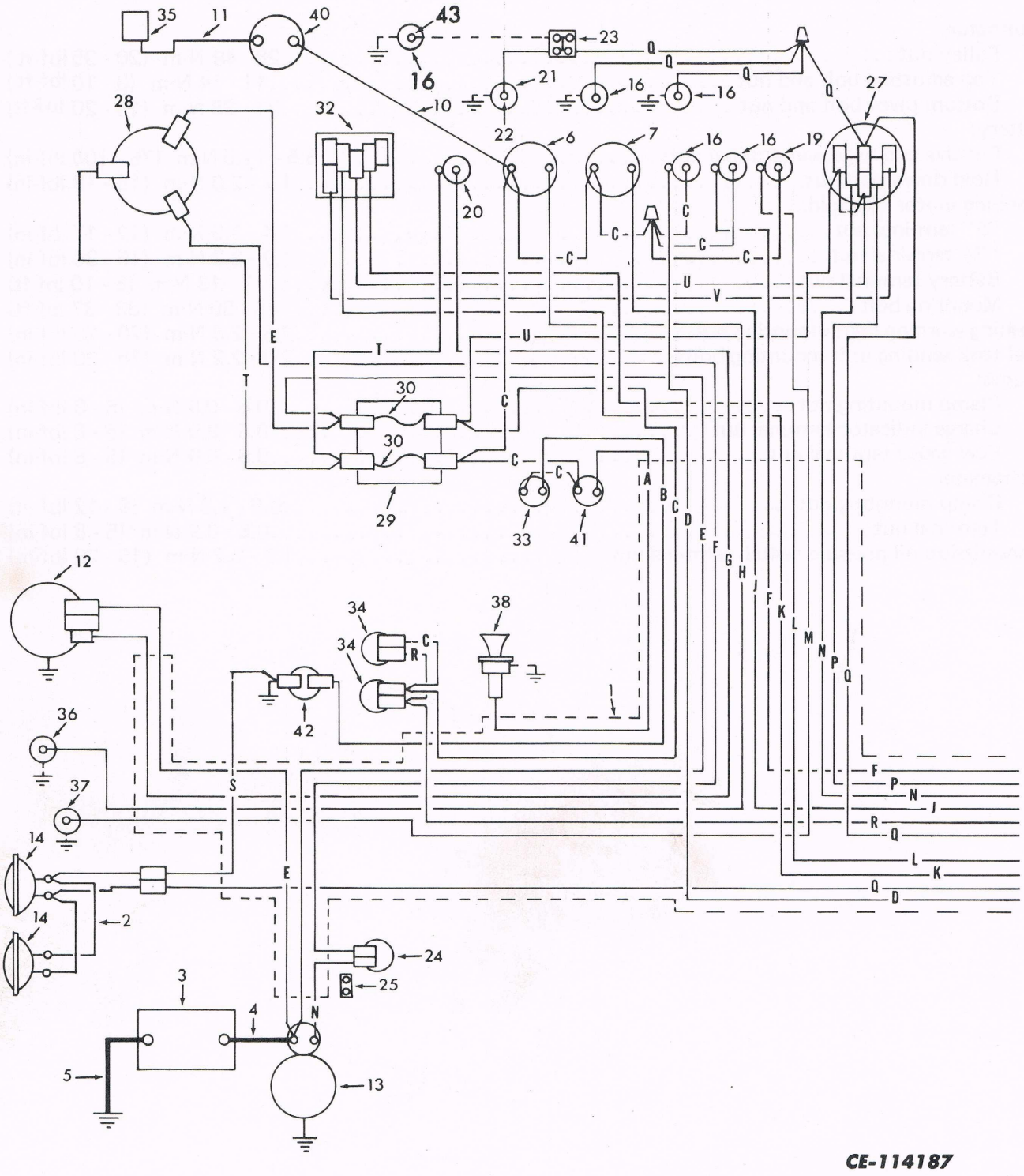

Fig. 1
Wiring Diagram.

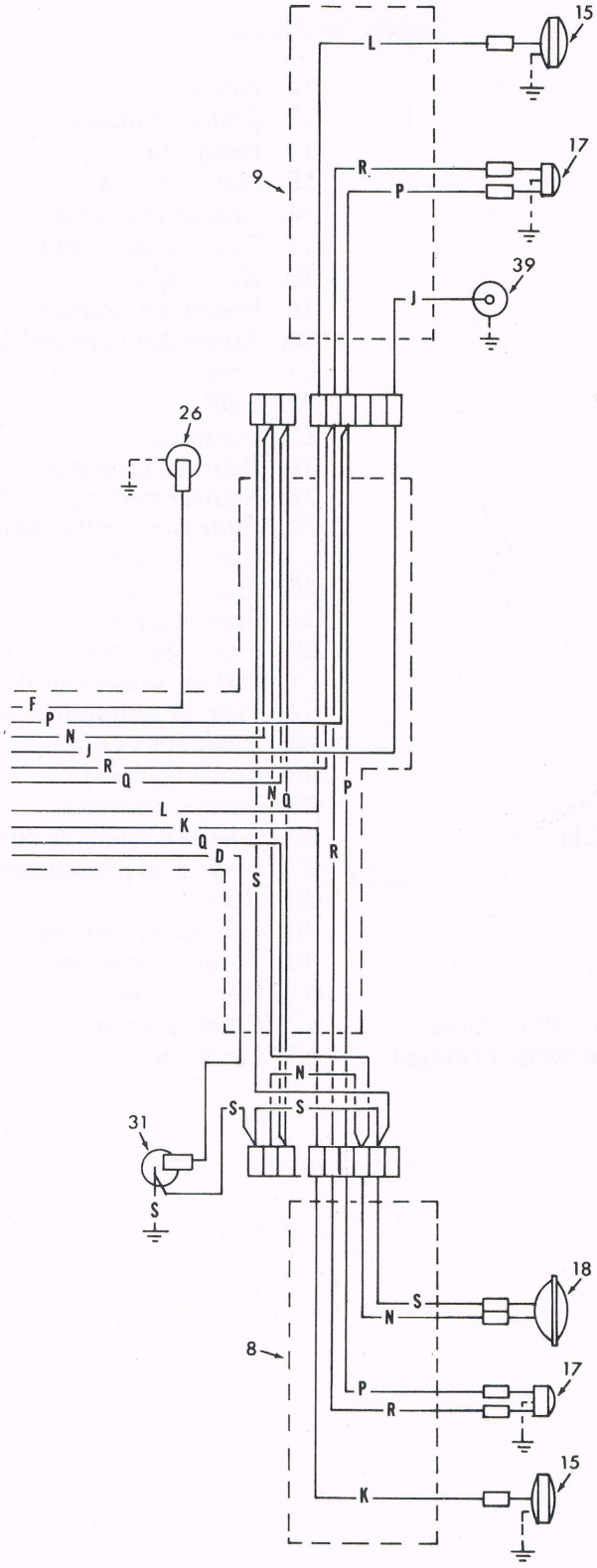

CE-114188

ELECTRICAL SYSTEM

WIRING DIAGRAM - Continued

Legend for Fig. 1

A - Purple/Black
B - Yellow/Black
C - Green
D - Purple/Red
E - Brown
F - Red/Black
G - Brown/Black
H - Green/Blue
J - Green/Black
K - Green/Red
L - Green/White
M - Pink
N — Red/White
P - Black/White
Q - Red
R - Green/Purple
S - Black
T - White
U - Purple
V - Orange/Brown

1. Main cable harness
2. Headlight cable
3. Battery
4. Battery to solenoid switch cable
5. Battery to ground cable
6. Engine temperature gauge
7. Fuel gauge
8. LH fender harness
9. RH fender harness
10. Torque converter temperature cable (Green)
11. Torque converter temperature cable (Yellow)
12. Alternator
13. Cranking motor
14. Headlight
15. Warning light
16. Instrument lamp
17. Tail and stop light
18. Work light
19. Engine oil pressure warning light
20. Alternator warning light
21. Lamp
22. Bulb
23. Connector
24. Neutral starting switch
25. Neutral starting switch bracket
26. Hydrostatic drive temperature switch
27. Light switch
28. Ignition switch
29. Fuse housing
30. Fuse (25 amp)
31. Parking brake warning light switch
32. Turn indicator/flasher switch
33. Ether start switch
34. Brake light switch
35. Torque converter oil transmitter switch
36. Engine coolant temperature transmitter
37. Engine oil pressure transmitter
38. Horn
39. Fuel gauge sending unit
40. Torque converter temperature gauge
41. Horn button
42. Ether injector solenoid
43. Lamp assembly with bulb

ALTERNATOR GENERATORS

Part Number	Ground	Rotation Viewing Drive End	Field Current at 12 Volts – Amps (80°F)	Cold Output at 14 Volts	
				Amps at 2000 rpm	Amps at 6000 rpm
3 113 331 R92	N	Either	4 - 4.5	25	28

CRANKING MOTORS

Part Number	Application	Rotation Viewing Drive End	No Load Test				
			Volts	Amps		RPM	
				Min.	Max.	Min.	Max.
1 107 867	Synchromesh/ Torque Converter	C	9.0	40*	140*	8,000	13,000
1 113 690	Hydrostatic drive	C	9.0	75*	105*	5,000	7,000

* - Includes cranking motor solenoid switch.

CRANKING MOTOR SOLENOID SWITCHES

Part Number	Current Draw Pull-In Winding		Current Draw Hold-In Winding	
	Volts	Amps	Volts	Amps
1 114 356 @ 1 115 540 *	5	26-29	10	18-20
65 478 C1 @ 65 479 C2 *	10	52-64	10	17-20

* - Hydrostatic Transmission
@ - Synchromesh or Torque Converter Transmission

BATTERIES

Part Number	Application	Volts	Ampere Hrs. 20 Hr. Rate
X-53291***	Synchromesh Torque Converter Drive	12	95
CLM-31X**	Hydrostatic Drive	12	128

** Prestolite Service Number
*** Delco Service Number

Section 10 Will Follow At A Later Date

SECTION 11

DIFFERENTIAL

CONTENTS

DIFFERENTIAL

GENERAL

The differential assembly for the torque converter transmission has four pinions with four shafts whereas all others have a two-pinion unit with a straight through shaft. The remaining parts of the differential assemblies are the same. The differential ring gear on all models is on the left side. The differential lock is always on the right side on all models, if equipped.

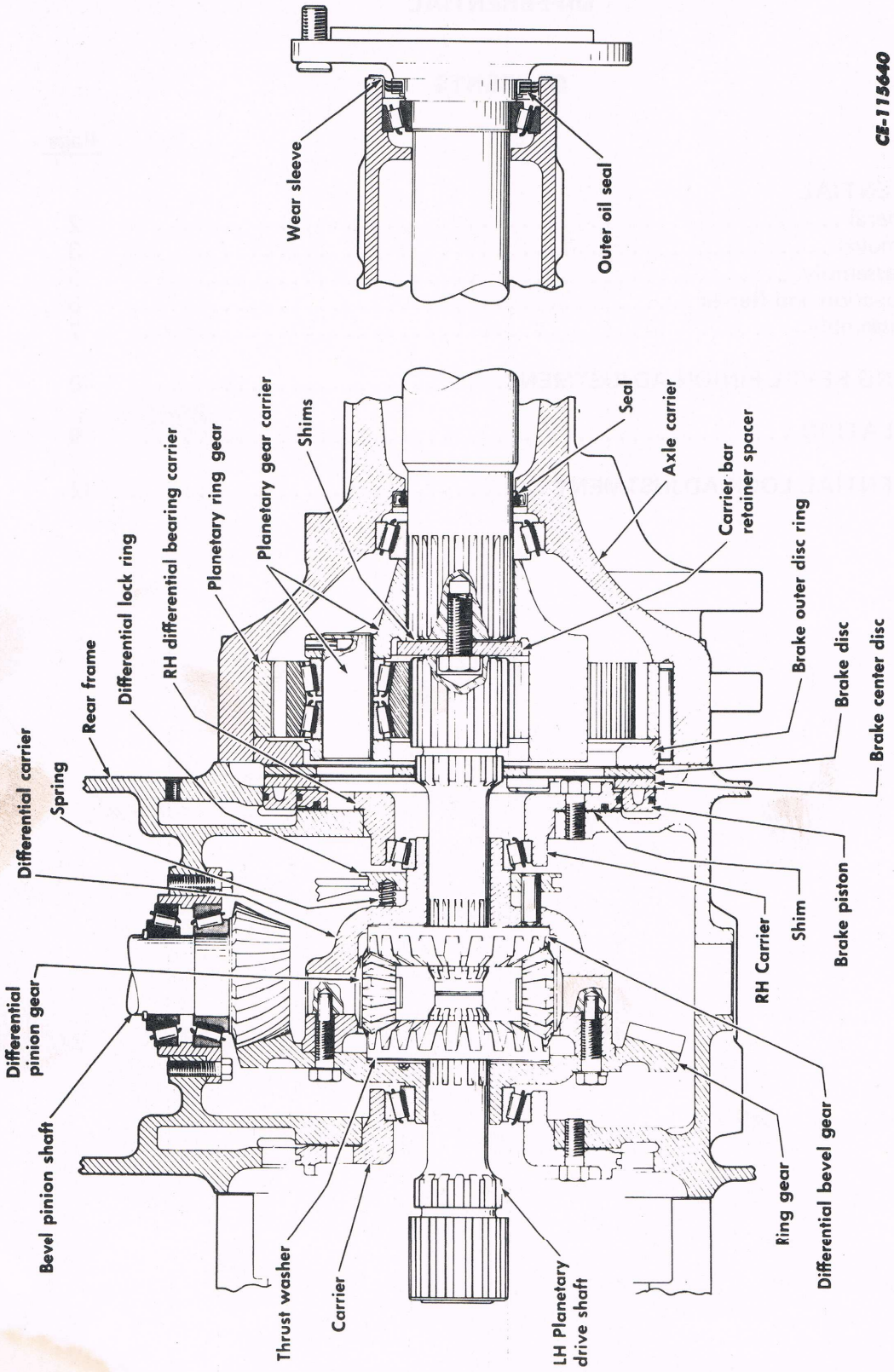

Fig. 1
Axle Carrier and Differential Assembly.

REMOVAL

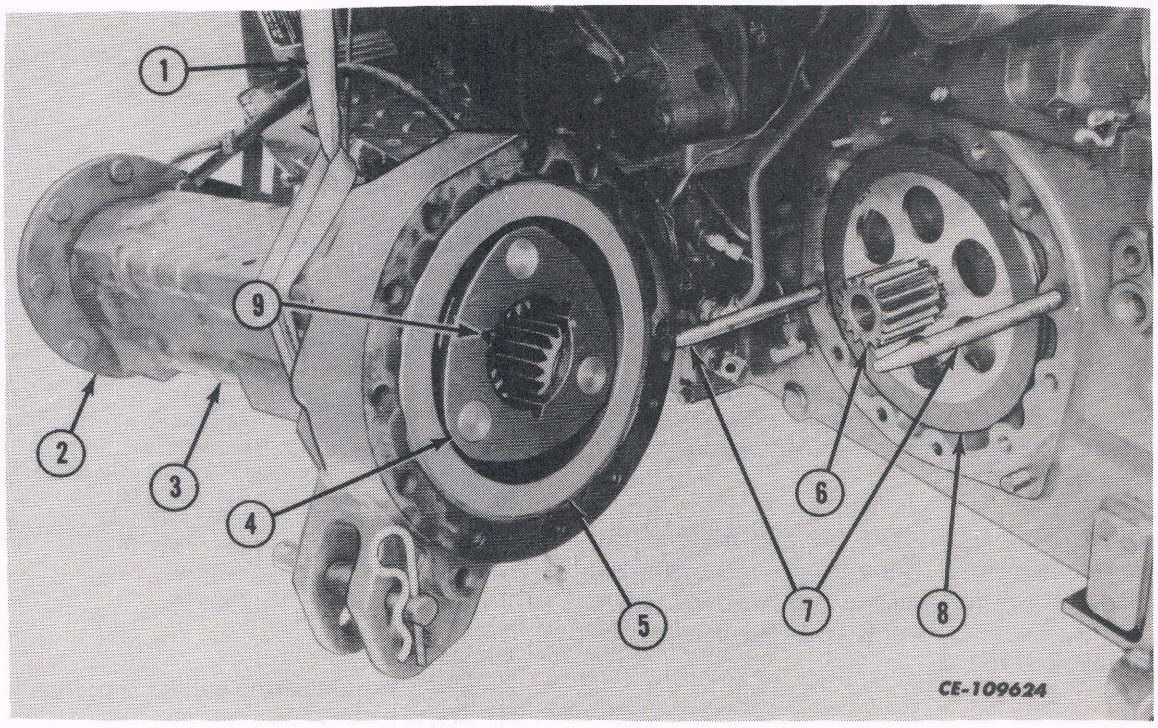

Fig. 2
Removing Axle Carrier.

1. PLT-120-2
2. Axle flange
3. Rear axle carrier
4. Planetary gear carrier
5. Brake outer disc ring
6. Planetary drive shaft
7. FES 10-21
8. Brake disc
9. Capscrew

1. Perform a rear section split. Refer to Section 2.

2. Support the range transmission and differential housing.

3. Remove both axle housings. Refer to Section 12.

4. Remove the planetary drive shafts (6). The right planetary drive shaft is longer than the left due to the differential lock. See Fig. 2.

5. Remove the brake disc (5) and brake center disc (8). See Fig. 2.

6. Install screws in the three tapped holes provided in the brake piston (2). Using a screwdriver, pry on the underside of the screw heads equally all the way around to remove the brake piston (2). See Fig. 3

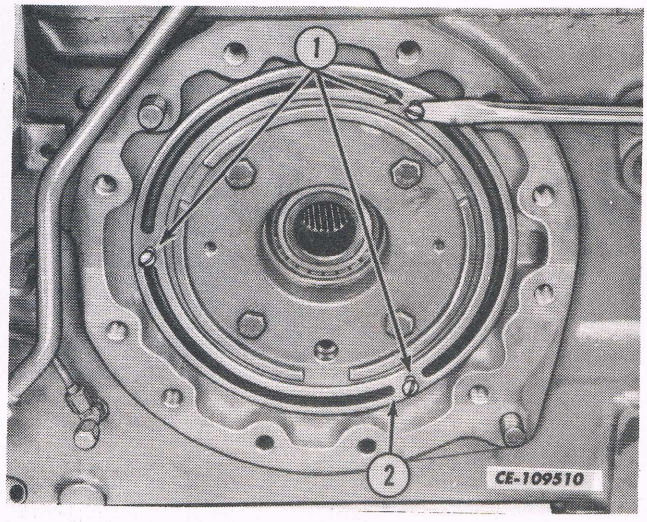

Fig 3.
Removing Brake Piston.

1. Slotted screws
2. Brake piston

REMOVAL - Continued

7. Tap out the roll pin (1) in the differential lock shaft cam (2). See Fig. 5.

8. Disconnect the pedal linkage from differential lock shaft.

9. Tap the lock shaft opposite the spring end, out of the housing.

10. Remove the cam (2), fork (3) and actuating spring (4). See Fig. 5.

NOTE: *There are shim washers between the shaft and housing. Note their number and location. These shims allow for proper disengagement.*

11. Attach sling PLT-120-1 (1) and hoist to the differential assembly. Remove carrier mounting capscrews. Install jack screws and remove carriers with shims. Keep the shims with the carriers for reassembly. See Fig. 6.

12. Raise the differential assembly out of the housing. Refer to Fig. 6.

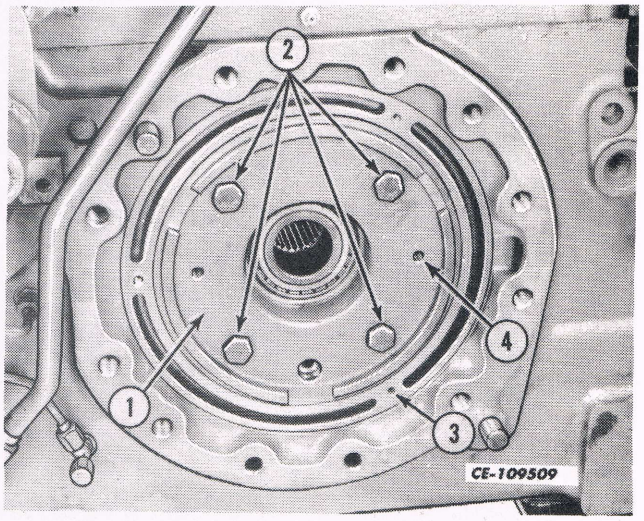

Fig 4
Carrier

1. Carrier
2. Differential bearing carrier capscrew
3. Brake piston
4. Jack screw holes for carrier

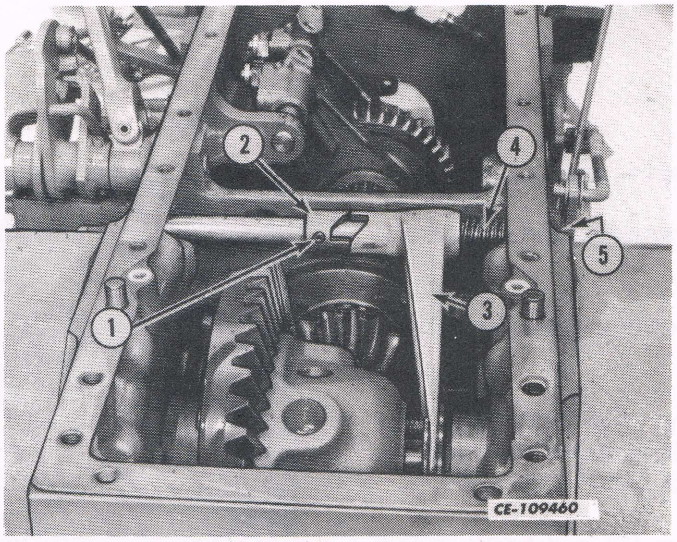

Fig. 5
Differential Lock Assembly.

1. Roll pin
2. Lock shaft cam
3. Shifter fork
4. Actuating spring
5. Shim washers

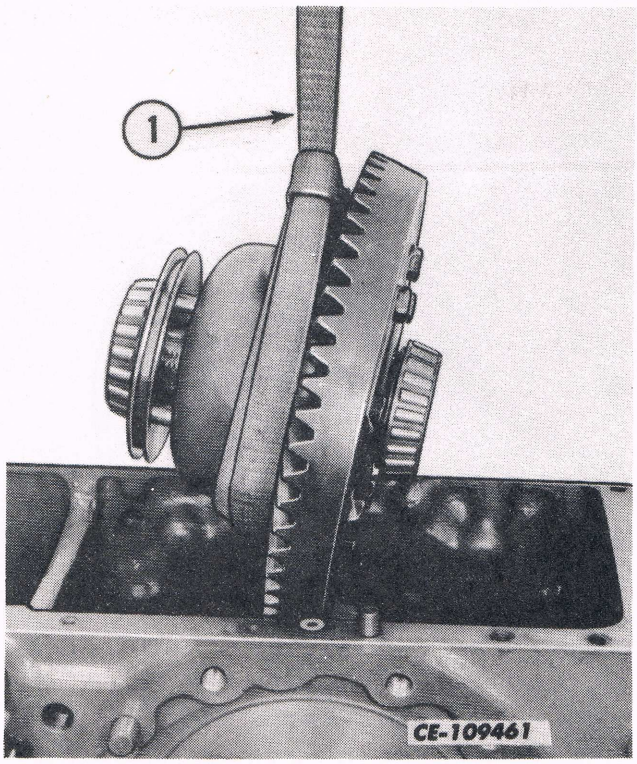

Fig. 6
Removing Differential Assembly.

1. PLT-120-1

NOTE: *The torque converter transmission has four differential pinion gears and shafts. All other transmissions have differential pinion gears on one straight through shaft.*

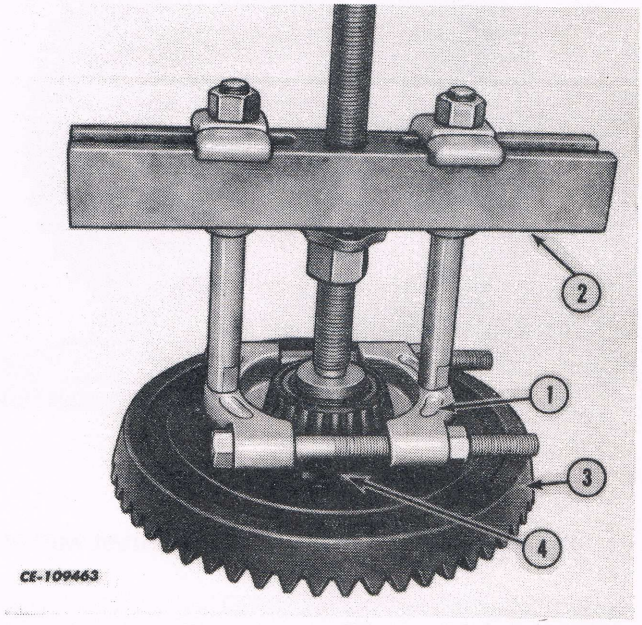

Fig. 7.
Removing Bearing.

1. OTC-952A
2. OTC-938
3. Ring gear
4. Differential carrier

DISASSEMBLY

1. Remove the capscrews from the ring gear.

2. Using a cross bar and OTC-952A puller (1), remove the tapered roller bearing on the ring gear side of the differential. Remove the differential carrier (4) from the ring gear (3). See Fig. 7.

3. Remove the differential bevel gear (1) from the ring gear (2). See Fig. 8.

4. Remove the thrust washer (2) from the ring gear. See Fig. 9.

5. Using OTC-952A puller (1) with bridge 938 (2) and legs 930-E (4), remove the tapered roller bearing and differential lock ring (3) from the carrier. See Fig. 10.

6. Remove the differential pinion shafts (1) and differential pinion gears (3). Remove the differential bevel gear (2). See Fig. 11.

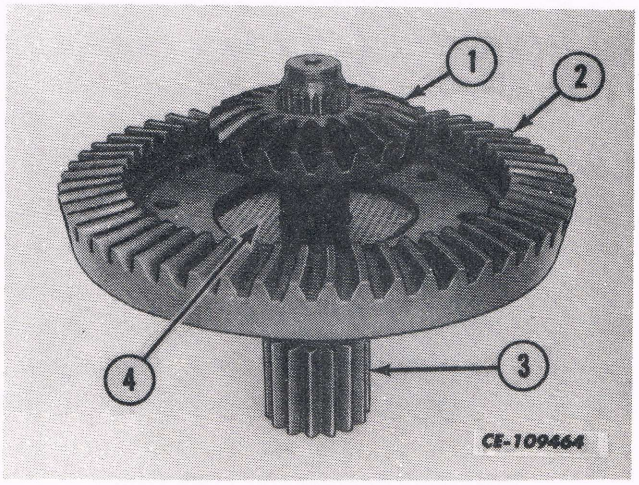

Fig. 8
Removing Bevel Gear.

1. Differential bevel gear
2. Ring gear
3. Planetary shaft
4. Thrust washer

DISASSEMBLY - Continued

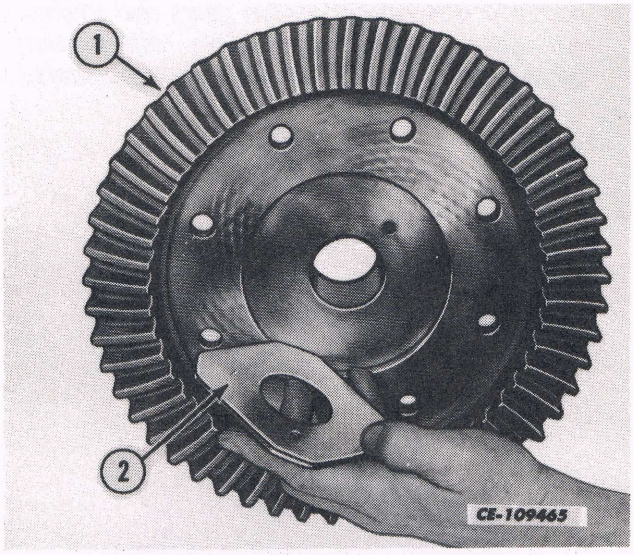

Fig. 9.
Removing the Thrust Washer.

1. Ring gear
2. Thrust washer

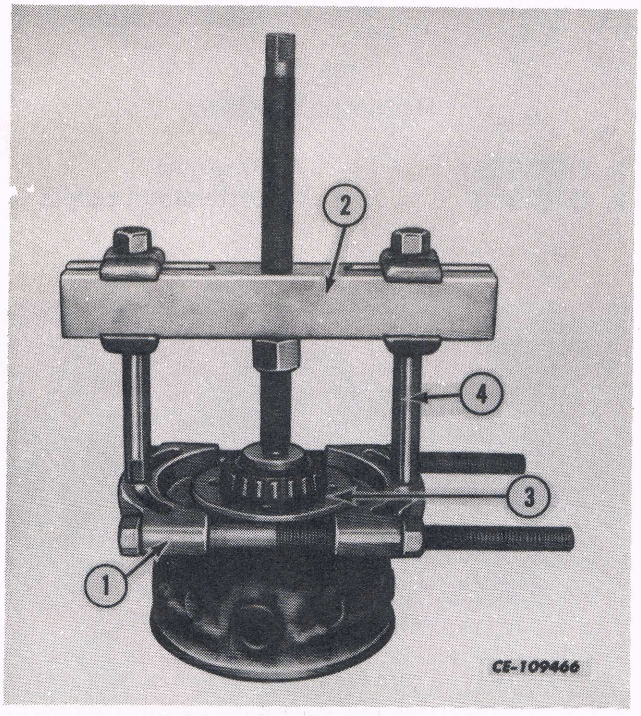

Fig. 10
Removing Bearing and Lock Ring.

1. OTC-952A
2. OTC-938
3. Differential lock ring
4. OTC-930E

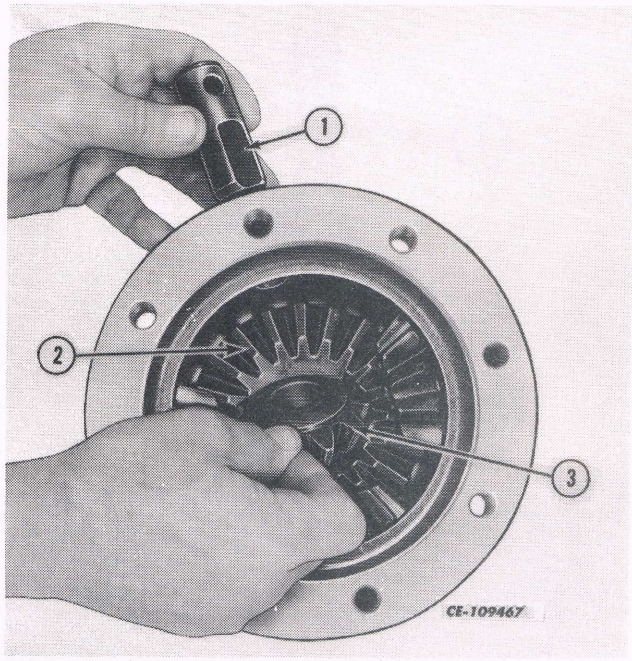

Fig. 11
Torque Converter Only.

1. Differential pinion shaft
2. Differential bevel gear
3. Differential pinion gear

INSPECTION AND REPAIR

1. Inspect the bearing cups and cones for roughness or pitting and replace if necessary.

2. Inspect all the gears and shafts for wear or damage and replace if necessary.

3. Replace the "O" rings on the differential lock shaft.

4. Inspect the bearing cages for damage. Repair or replace as necessary.

REASSEMBLY

1. Install the inner differential bevel gear in the differential carrier.

2. **All Except Torque Converter:** Install the two differential pinion gears and one differential pinion shaft. Be sure the bolt holes in the differential pinion shaft line up with the holes in the carrier.

3. **Torque Converter Only:** Install the four differential pinion gears and shafts. Be sure the bolt holes in the differential pinion shafts line up with the holes in the carrier.

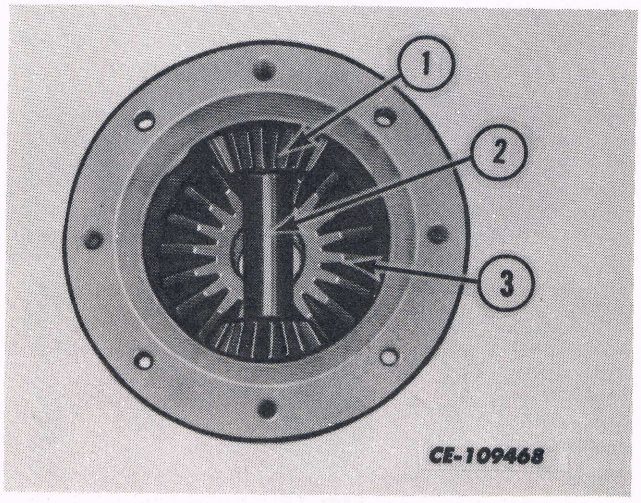

Fig. 12
Installing Pinion Gears and Shaft.
(All except Torque Converter)

1. Pinion gear 2. Pinion shaft
3. Bevel gear.

4. Install the differential lock ring (1) with its springs (3) and coupling pins (2) on the hub of the differential carrier. See Fig. 14.

5. Press the smaller tapered roller bearing on the carrier hub until it bottoms against the shoulder of the hub. See Fig. 15.

6. Install a new thrust washer (2) in the center of the ring gear (3) so that the tang of the thrust washer engages the hole in the ring gear. See Fig. 16.

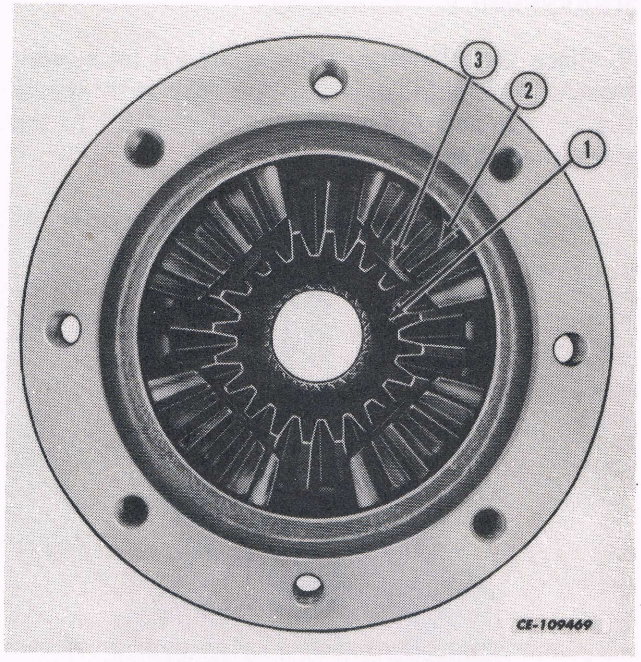

Fig. 13
Installing Pinion Gears and Shaft.
(Torque Converter Only)

1. Bevel gear 2. Pinion gear
3. Pinion shaft

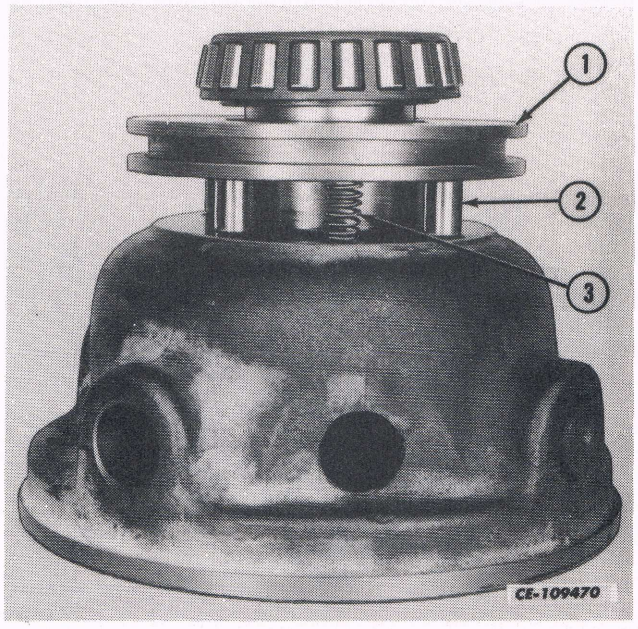

Fig. 14
Installing Lock Ring onto Carrier.

1. Lock ring 2. Coupling pin
3. Spring

REASSEMBLY - Continued

7. Place the planetary drive shaft (4) on a work bench. Assemble the ring gear (3) with thrust washer (2) and differential bevel gear (1) to the drive shaft. See Fig. 16.

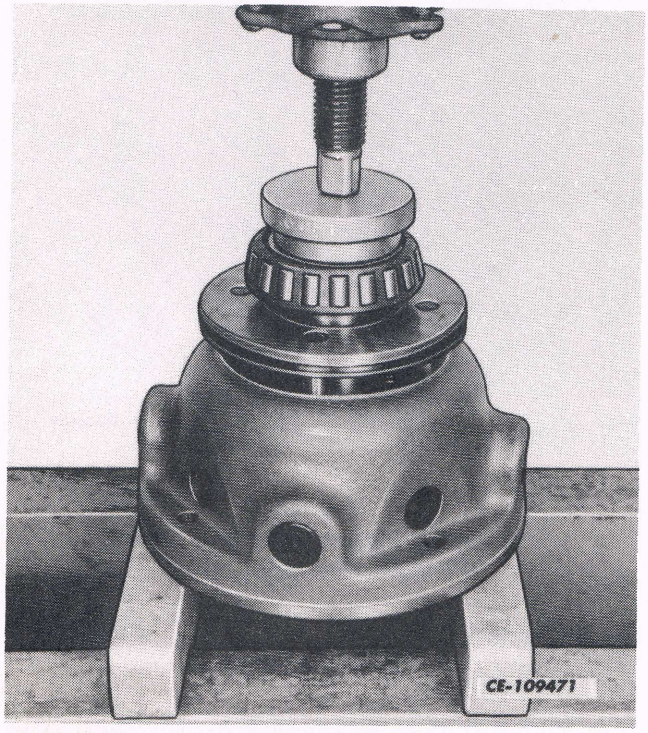

Fig. 15
Installing Bearing.

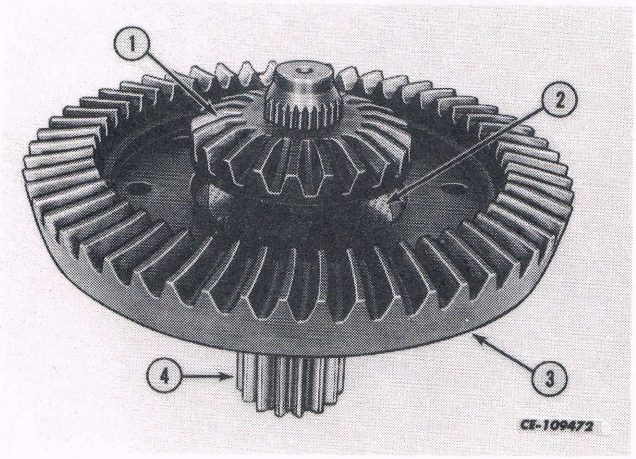

Fig. 16
Installing Gears onto Drive Shaft.

1. Differential bevel gear
2. Thrust washer
3. Ring gear
4. Planetary drive shaft

8. Position the assembled differential carrier on the ring gear assembly (Fig. 17).

9. With the capscrews dry and free of oil, apply Loctite No. 262 to the threads and torque the bolts to 156-176 N·m (115-130 ft-lbs).

10. Remove the planetary drive shaft and press the larger tapered roller bearing on the ring gear hub until it bottoms on the shoulder of the hub. See Fig. 18.

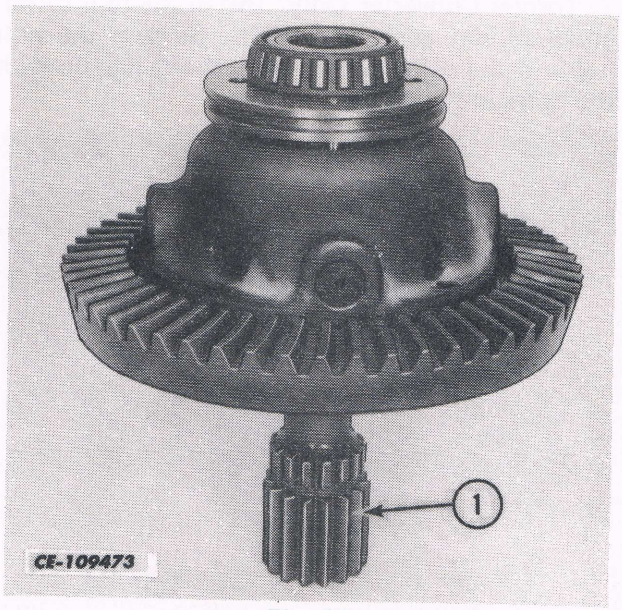

Fig. 17
Differential Carrier on Ring Gear.

1. Planetary drive shaft.

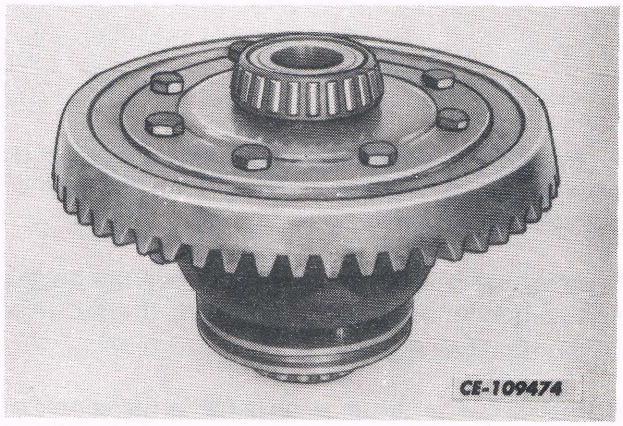

Fig. 18
Bearing Installed on Ring Gear Hub.

CHECKING BEVEL PINION ADJUSTMENT

1. Install the PLT-700-2 pinion shaft checking tool in the differential bearing bores in the rear frame (Fig. 19). Be sure each end of the gauge bar is in full contact with the differential bearing bore.

NOTE: *Be sure the pinion shaft is fully forward.*

2. Using a telescoping gauge (1), measure the distance between the gauge bar and the face of the bevel pinion (2). See Fig. 19.

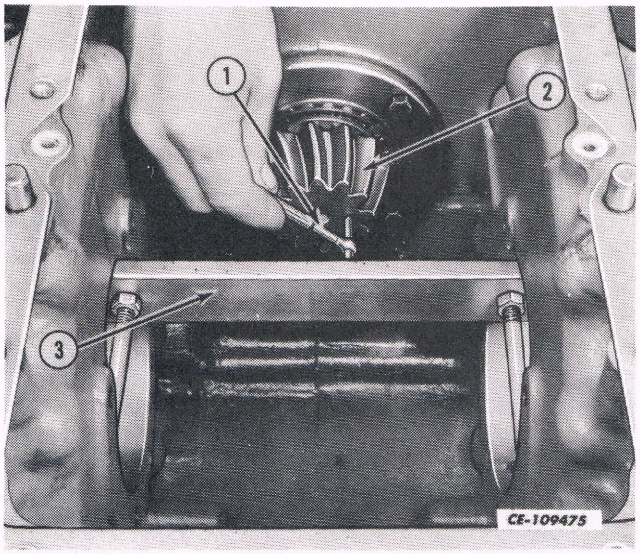

Fig. 19
PLT-700-2 Installed in Rear Frame.

1. Telescoping gauge. 2. Bevel pinion
3. PLT-700-2.

3. The reading etched on the end of the pinion, minus (-) 63.5 mm (2.5 in) will give the specified distance the bevel pinion must be set to. This establishes the proper tooth contact of the pinion and ring gear when backlash is established between the ring gear and the pinion.

4. If it was found necessary to replace the pinion or rear frame, it may be necessary to add or remove shims from the pinion shaft to obtain the specified setting.

INSTALLATION

1. Lubricate thoroughly the entire unit and component parts with Hy-Tran.

2. Using a sling and hoist, lower the differential in place in the rear frame with the ring gear on the left side.

3. Install the left and right differential bearing carriers in the rear frame *without* shims and "O" rings. Be sure the lubrication hole is at the bottom.

4. Install the four capscrews in the right carrier and tighten them to 115 N·m (85 ft-lbs) torque.

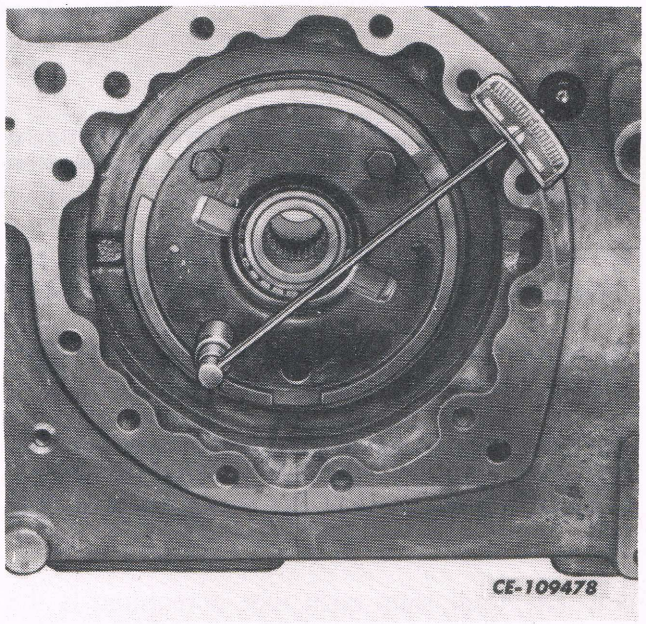

Fig. 20
Installing Carrier Capscrews.

5. Install the left carrier capscrews. Tighten the capscrews, using torque wrench, equally and in steps to 3, 5.5, 8.5 and 11.3 N·m (25, 50, 75 and 100 in-lbs) while rotating the differential to seat the parts.

6. Loosen the left carrier capscrews. Check and record the free rolling torque of the differential (Fig. 21).

INSTALLATION - Continued

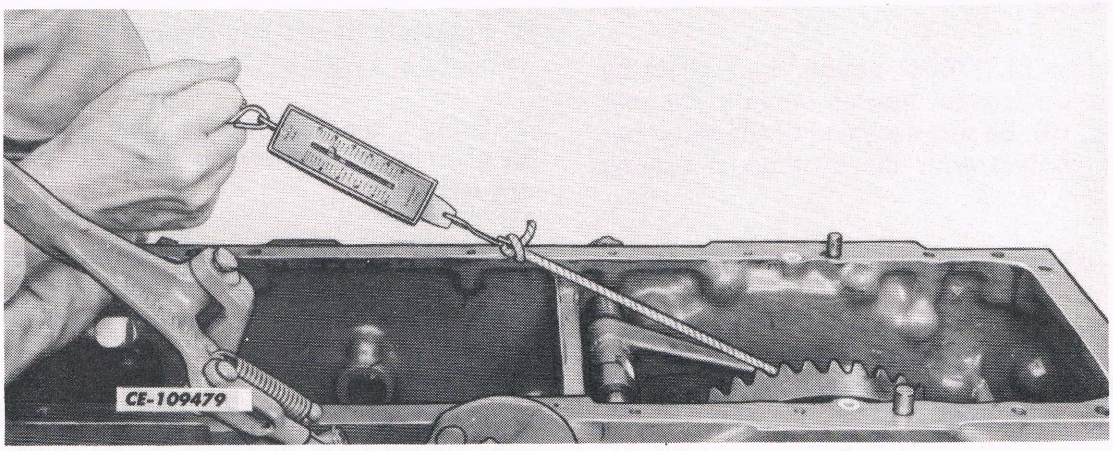

Fig. 21
Checking Rolling Torque.

7. Retorque the left carrier capscrews evenly to 2.3 N·m (20 in-lbs) torque while rotating the differential.

8. Without rotating the differential, tighten the capscrews further to 3.4 N·m (30 in-lbs) torque.

9. Rotate the drive bevel gear and tap lightly from side to side to fully seat the bearings.

10. Using a feeler gauge, measure the gap between the back side of the carrier and the frame, through the two slots in the frame. Refer to Fig. 22.

11. The total shim pack that is required is the average measured gap, ± 0.05 mm (0.002 in). The total shim pack, for initial placement, should be divided between the two carriers.

> **NOTE:** *The maximum shim thickness is not to exceed 1.80 mm (0.071 in) on any one side.*

12. Install the carriers with shim packs. Gradually and evenly tighten the mounting capscrews to 115 N·m (85 ft-lbs) torque while rotating the differential.

13. Check the free rolling torque of the differential and record the reading obtained. This reading should be from 1.1 - 4.0 N·m (10 - 35 in-lbs) *greater* than the pull obtained in step 6.

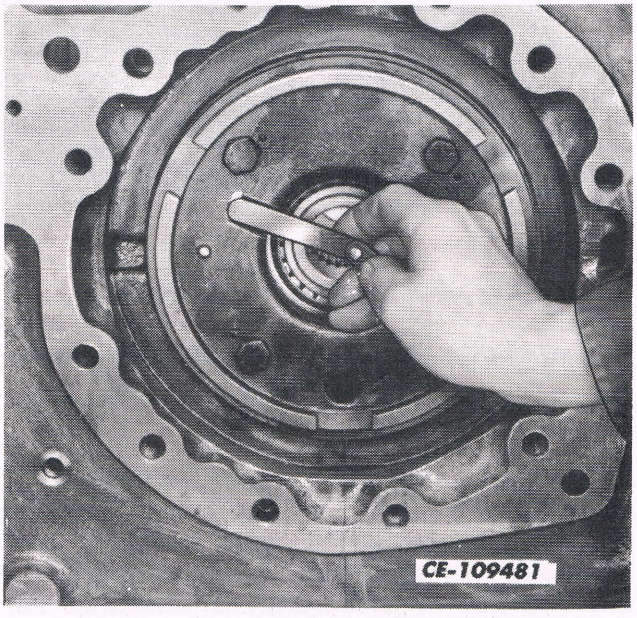

Fig. 22
Checking Gap Between the Carrier and the Frame.

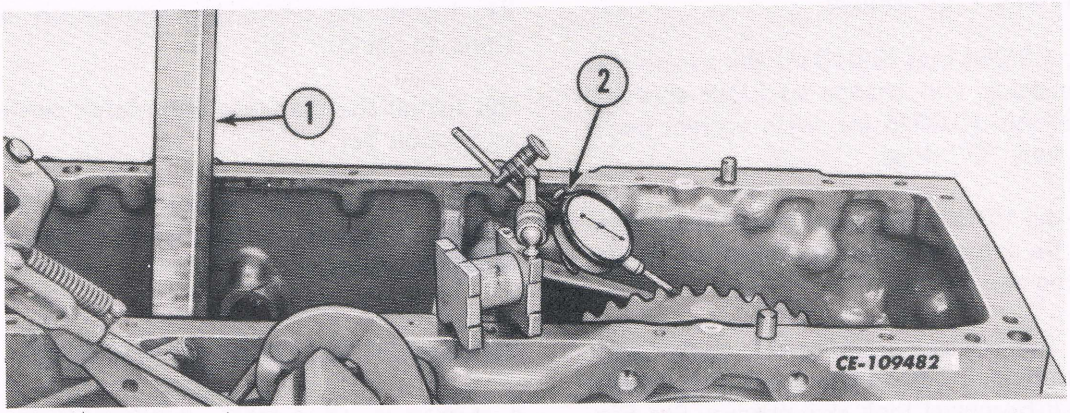

Fig. 23
Checking Ring Gear Backlash.

1. Wooden wedge block
2. Dial indicator

14. Using a dial indicator, check the backlash of the ring gear (Fig. 23). Block the main shaft so it does not turn. The specified backlash is 0.15 - 0.28 mm (0.006 - 0.011 in). Inspect at two points 180 degrees apart.

15. If specified backlash is not obtained, it will be necessary to move shims from one side to the other of the differential bearing carriers to provide the specified backlash. Do not remove or add shims since this changes preload.

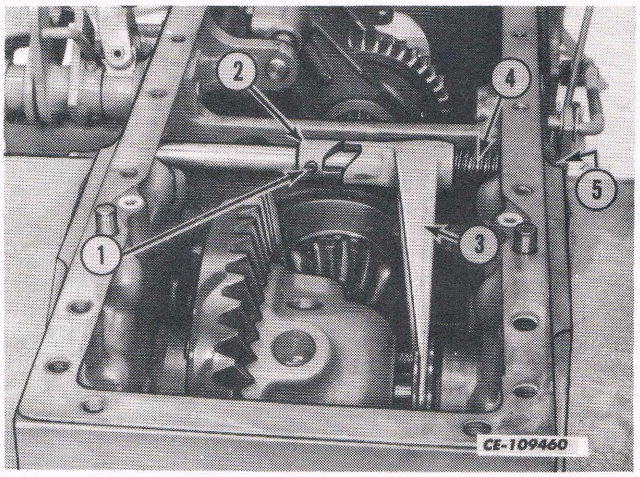

Fig. 24
Differential Lock Assembly.

1. Roll pin
2. Lock shaft cam
3. Shifter fork
4. Actuating spring
5. Shim washers

INSTALLATION - Continued

16. Moving a 0.254 mm (0.010 in) shim from one side to the other will change backlash approximately) .191 mm (0.0075 in). With correct backlash, install new "O" rings.

17. Install the differential lock shaft, using new "O" rings. Be sure the shims removed are to the outside of the rear frame.

18. Thread the actuating spring (4), shifter fork (3), lock shaft cam (2) on the shaft. Engage the fork in the differential lock ring groove. See Fig. 24.

19. Install the roll pin (1) through the cam and into the shaft. See Fig. 24.

20. Connect the pedal linkage to the lock shaft.

21. Install the brake disc and piston assemblies (refer to Section 13).

22. Install the rear axle and planet carriers (refer to Section 12).

CAUTION! Before driving the tractor, bleed the brakes. Refer to Section 13 for procedure.

DIFFERENTIAL LOCK ADJUSTMENT

1. Adjust the rod (1) so that the shaft assembly (3) is vertical when the pedal is up (in the disengaged position).

2. Adjust the stop bolt (2) so that the pedal does not hit the platform.

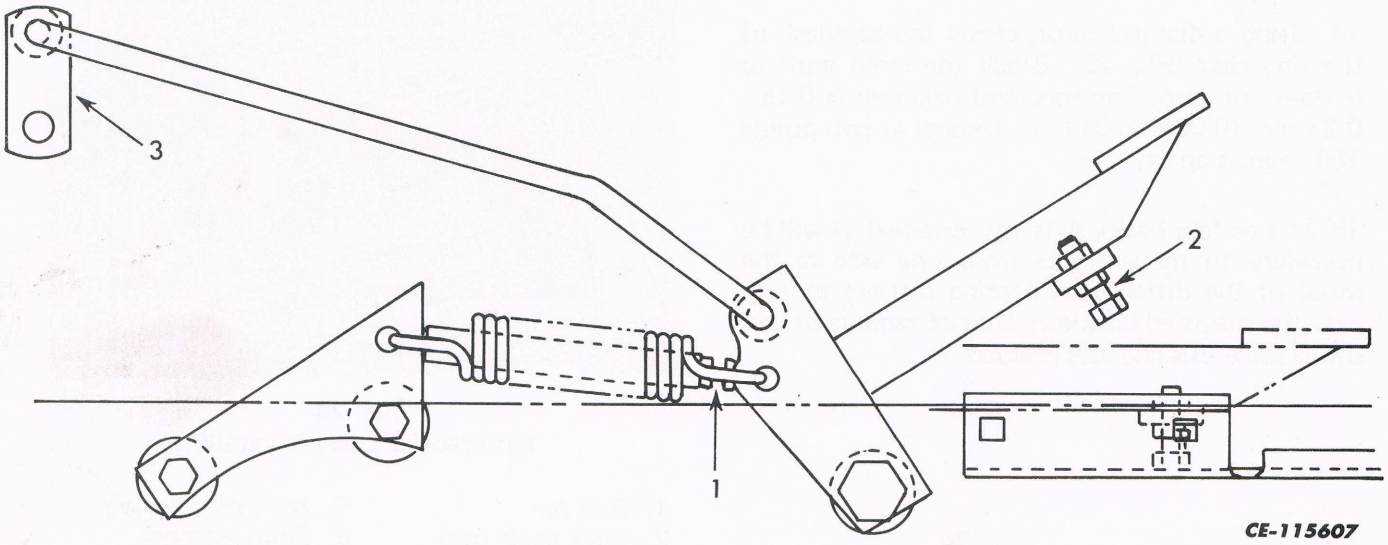

Fig. 25
Differential Lock Pedal Adjustment.

1. Differential lock rod.
2. Stop bolt.
3. Shaft assembly.

CONTENTS

SPECIFICATIONS

Axle Shaft End Play	0.03 - 0.25 mm (0.001 - 0.010 in)
Axle Shaft Free Rolling Torque	2.3 - 3.4 N·m (20 - 30 in-lbs)
Special Torques:	
Planet Carrier Mounting Bolt	339 N·m (250 ft-lbs)
Axle Mounting Bolts	285 - 312 N·m (210 - 230 ft-lbs)
Rear Wheel Mounting Bolts	298 - 325 N·m (220 - 240 ft-lbs)

REMOVAL

1. Drain the rear frame as described in the Operator's Manual.

2. Remove the hitch arm and lower link on the side of the axle housing to be removed.

3. Support the tractor main frame and remove the rear wheel from the side of the axle housing to be removed.

4. Remove the ROPS and loader. Refer to Section 2.

5. Block up the rear transmission frame.

NOTE: *Remove the rear sheet metal cover and remove the bolts securing the seat deck to the main frame and fender on the side of the axle housing to be removed.*

6. Remove hydraulic tubing and the parking brake cable as necessary.

7. Support the axle housing with a sling PLT-120-1 and suitable hoist. Remove the cap screws securing the axle housing to the rear frame and remove the axle housing.

DISASSEMBLY

1. Remove the brake outer disc ring from the axle carrier. Refer to "BRAKES" in Section 13.

2. Remove the bolt securing the planetary assembly to the axle shaft. Remove the carrier assembly from the axle housing.

CAUTION! If the axle carrier was only removed for the replacement of the brake disc, take the necessary steps to push in on the brake piston and disc until the disc bottoms out on the differential bearing carrier before replacing axle carrier.

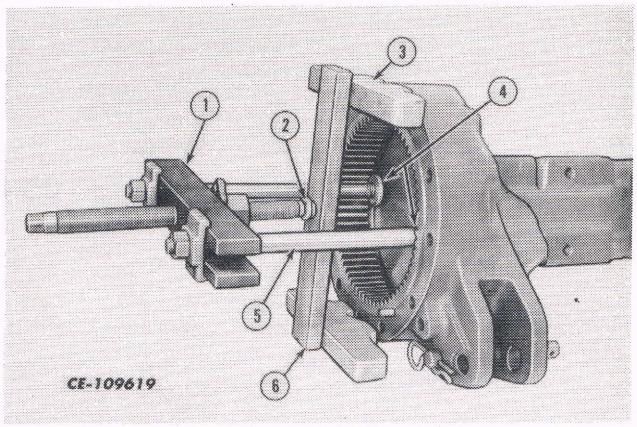

Fig. 1
Removing the Ring Gear.

1. OTC-938
2. Step plate
3. OTC-479
4. PLT-700-3
5. OTC-930-D
6. Wood block or steel plate

NOTE: *There is a shim pack between the axle carrier and carrier retainer spacer. Keep the shims together.*

3. Pull the ring gear using a puller as shown. DO NOT push against the end of the axle.

4. Push the axle with outer oil seal and outer bearing cone out of the inner bearing cone using pusher arrangement as shown. It may be necessary to tap the pushing bolt with a brass hammer to start the axle moving.

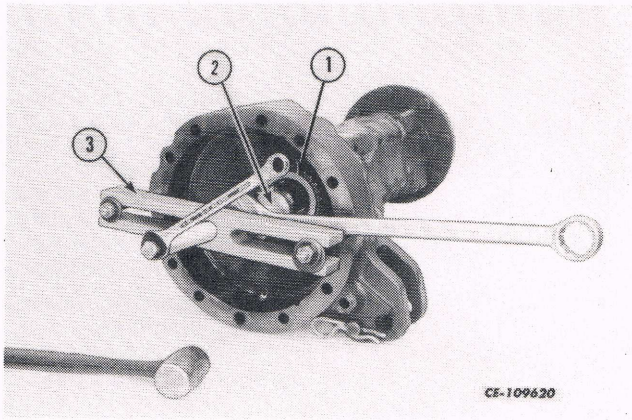

Fig. 2
Removing the Axle Shaft.

1. Inner bearing cone
2. Step plate
3. OTC-938.

DISASSEMBLY - Continued

5. Remove the bearing cups and inner oil seal from the axle carrier, if necessary. Discard oil seal.

6. If necessary, remove the outer seal wear sleeve in the carrier.

7. If necessary, remove the outer bearing cone and oil seal from the axle. Discard oil seal.

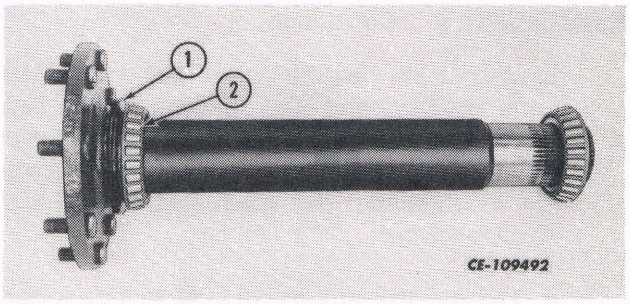

Fig. 3
Axle Shaft Outer Bearing and Seal

1. Outer seal
2. Outer bearing cone

SERVICING THE PLANET CARRIER

DISASSEMBLY

1. Drive the roll pin into the planet shaft pin (5, Fig. 4) from the outside of the carrier (2, Fig.4).

2. Drive or press the planet shaft pins out of the carrier.

3. Remove each planet gear (4) with its two roll bearing cone assemblies and carrier retainer spacer. The bearing cups are an integral part of the gear. See Fig. 4.

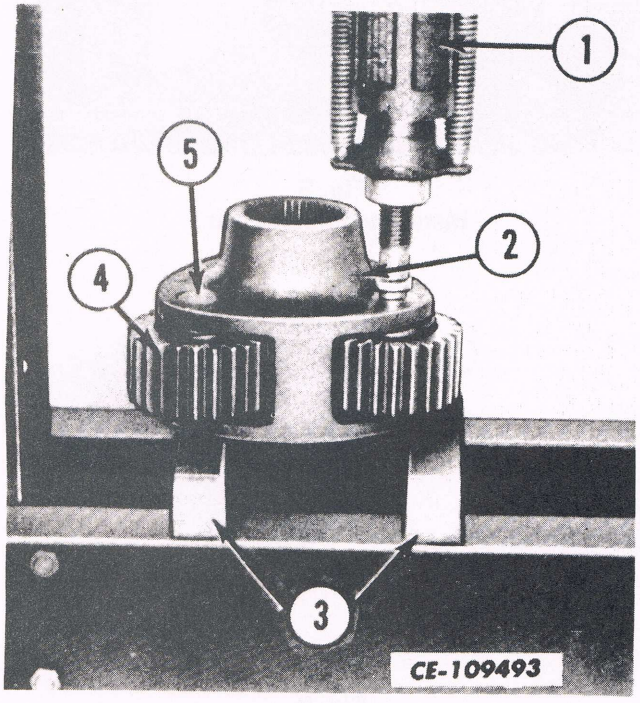

Fig. 4
Removing Planet Gear Shaft.

1. Hydraulic ram.
2. Carrier.
3. Supports.
4. Planet gear.
5. Planet shaft pin.

INSPECTION AND REPAIR

1. Inspect the gears for wear or pitting and replace if necessary.

2. Inspect the bearing cups and cones and replace if necessary.

REASSEMBLY

1. To establish planet gear preload with shims, proceed as follows:

   a. Obtain one, 1/2 NF x 3 inches long cap screw with nut. Cut two flat washers, 2 inch O.D. x 17/32 I.D. x 1/8 inch thick as shown in Fig. 5.

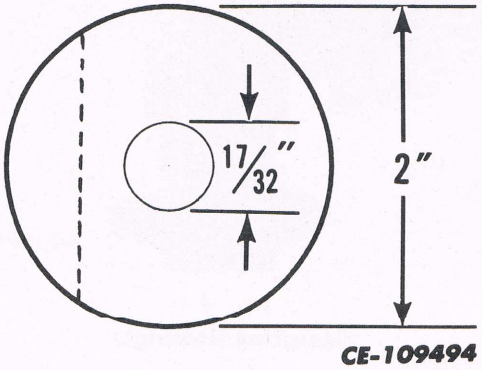

Fig. 5
Modified Washer.

REASSEMBLY - Continued

b. With both bearing cones well lubricated with Hy-Tran and positioned over the cap screw with a washer on the bearing cone outer faces, locate the washers so the cuts are in alignment for micrometer checking. Attach the nut.

c. Tighten the nut to 13.6 N·m (10 ft-lbs) torque while rotating the gear.

d. Take a micrometer reading on the outer faces of the bearing cones where the washers are cut away as shown in Fig. 7. Record the reading obtained.

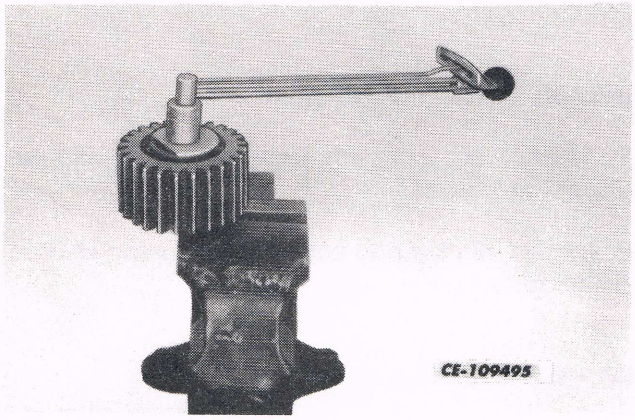

Fig. 6
Bearing Preload.

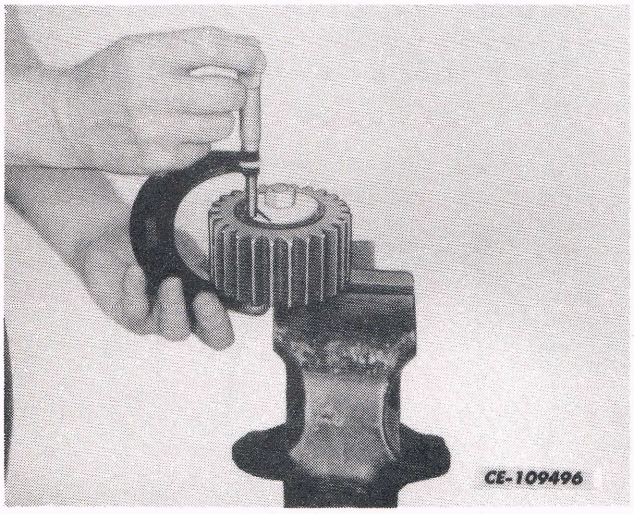

Fig. 7
Measuring Bearings.

e. Determine the shims required to obtain the specified bearing preload using the following chart.

Figure Obtained	Shims Required
53.67 - 53.82 mm (2.113 - 2.119 in)	1.42 mm (0.056 in)
53.85 - 54.03 mm (2.120 - 2.127 in)	1.24 mm (0.049 in)

f. Keep each gear with its established shims together.

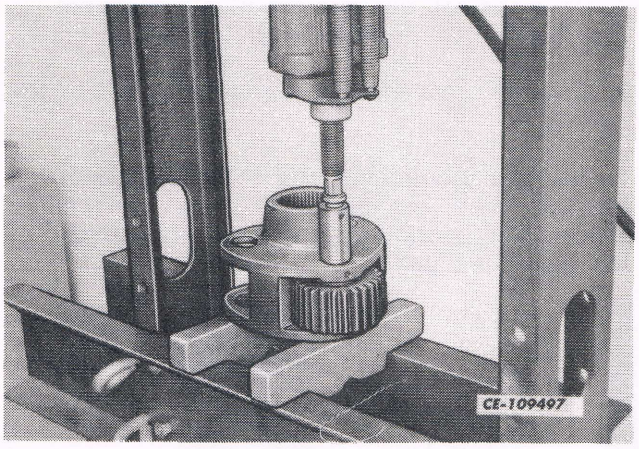

Fig. 8
Installing Planet Gear.

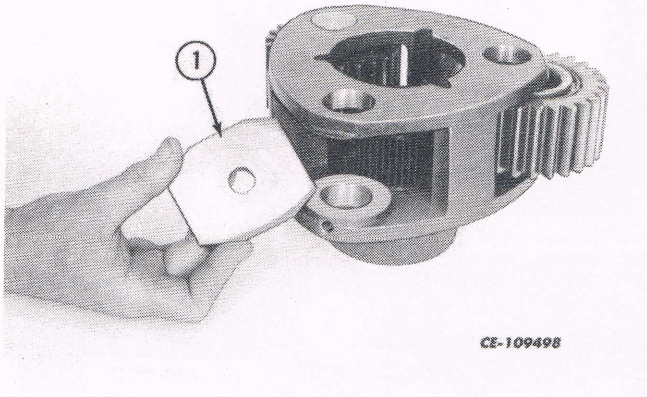

Fig. 9
Installing Carrier Retainer Spacer.

1. Carrier retainer spacer.

2. Install one gear only with shims into the planet carrier. Align roll pin hole in the carrier and planet shaft pin. Press the pin in until the roll pin holes line up. Install the roll pin flush with the carrier face.

3. Install the carrier retainer spacer (1, Fig. 9).

4. Install the two remaining planet gears with shims in the carrier as outlined in step 2.

5. Be sure the planet gears rotate freely. It may be necessary to tap the gears from the bottom to equalize proper preload on the bearings. Refer to Fig. 10.

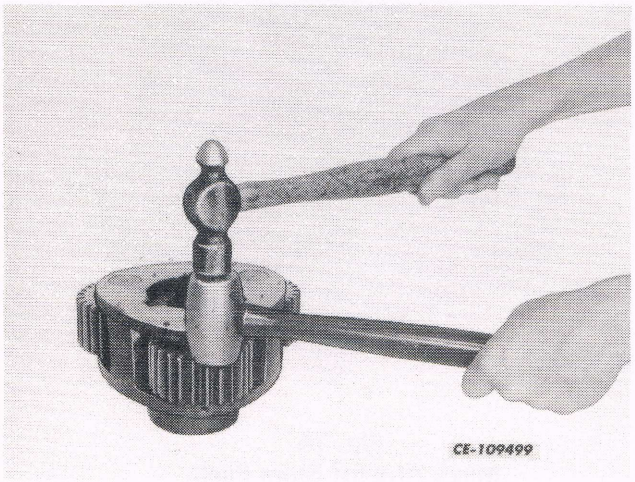

Fig. 10
Centering Bearing Preload.

6. Install the axle bearing cup in the axle carrier. Install new inner oil seal with spring removed, using FES 60-9. Install spring after seal is installed.

7. Install a new outer seal wear sleeve, if removed.

8. Install the outer bearing oil seal and bearing cone on the axle assembly.

9. Pack the inner and outer bearing cones with multi-purpose grease. Install the axle into the carrier.

10. While turning the axle, drive the inner bearing cone on the axle until the planetary carrier assembly can be installed, using the 5/8 NF cap screw. Tighten the cap screw to position the inner bearing so there is from 0.03-0.25 mm (0.001-0.010 in) end play. Check with a dial indicator. Refer to Fig. 11.

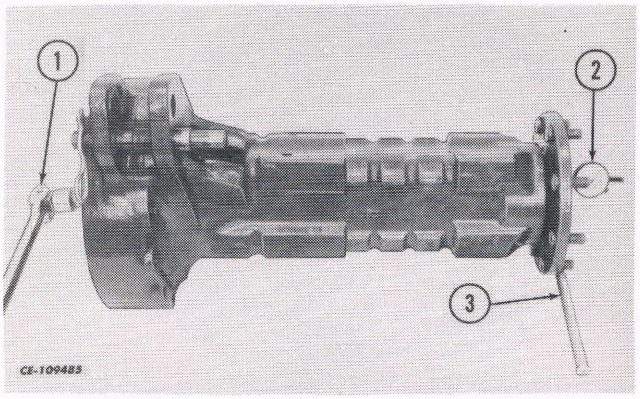

Fig. 11
Measuring Axle End Play.

1. Wrench on 5/8 NF cap screw
2. Dial indicator
3. Bar to lock axle from turning

11. With the 0.03-0.25 mm (0.001-0.010 in) end play established, obtain free rolling torque with a torque wrench while turning at the slowest rotation possible on the planet carrier 5/8 NF cap screw. Record the reading obtained.

12. Continue to drive the inner bearing cone on the axle until you obtain 2.3-3.4 N·m (20-30 in-lbs) rolling torque OVER that which was obtained in step 11.

13. Remove the 5/8 NF cap screw and planet carrier from the axle housing.

14. Using a depth micrometer, measure the distance between the end of the axle and the inner bearing cone face as shown in Fig. 13. Record the reading obtained.

REASSEMBLY - Continued

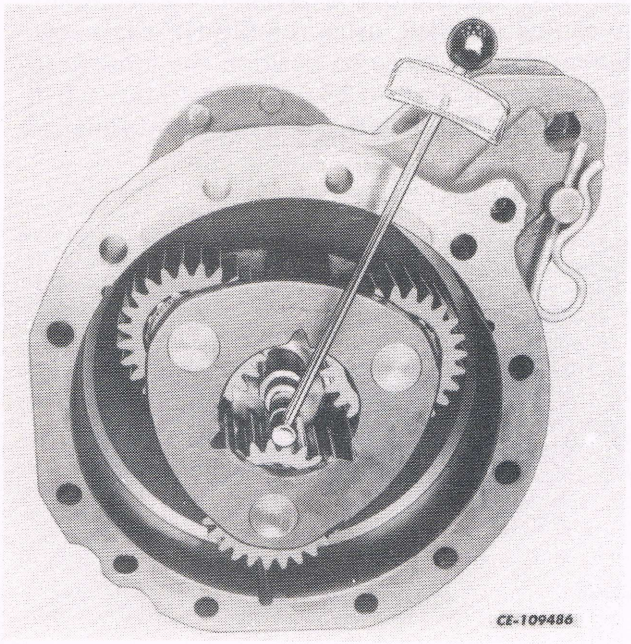

Fig. 12
Measuring Free Rolling Torque.

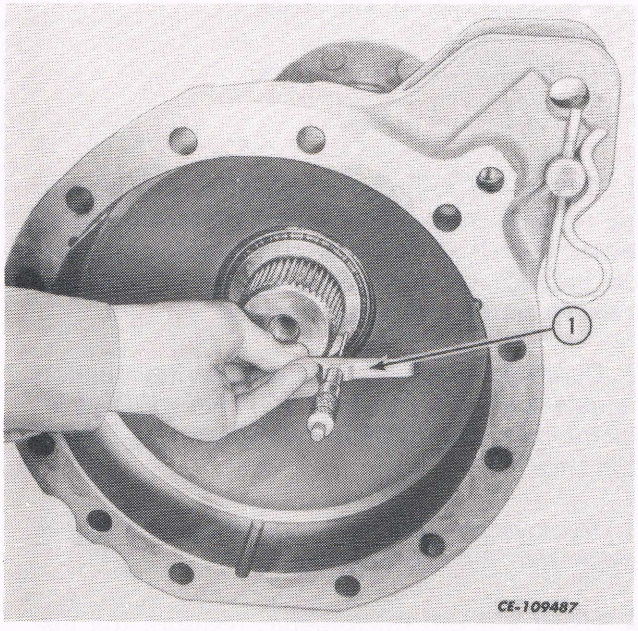

Fig. 13
Measuring for Shim Pack.

1. PLT-121.

15. Using the planetary drive shaft, support the spacer in the planet carrier assembly to obtain the hub to spacer dimension using a depth micrometer as shown in Fig. 14. Record the reading.

16. Select shims (shim pack) within 0.05 mm (0.002 in) of the difference obtained in the reading of steps 14 and 15.

17. Install the axle carrier ring gear with dowels using a wood block. Tap on the ring gear equally, all the way around. Refer to Fig. 15.

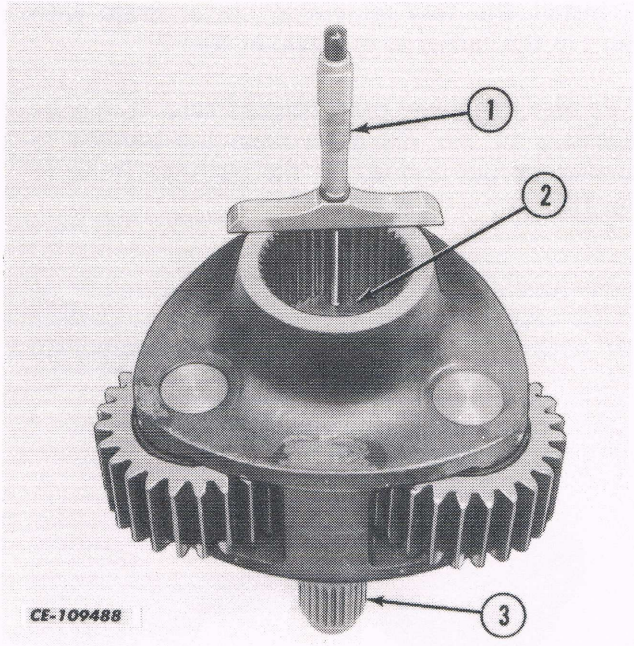

Fig. 14
Measuring for Shim Pack.

1. PLT-121
2. Spacer
3. Planetary drive shaft

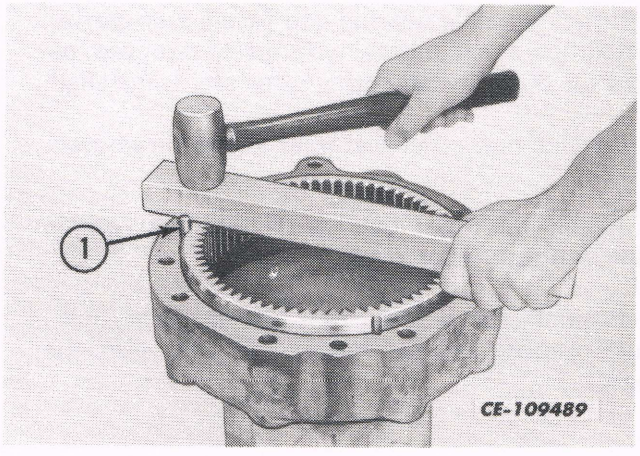

Fig. 15
Installing Ring Gear.

1. Dowel.

18. Coat the shim pack obtained in step 16 with petroleum jelly. Position the shim pack on the end of the axle. Refer to Fig. 16.

19. Install the planet carrier assembly on the axle and ring gear. Be sure the shims are properly located.

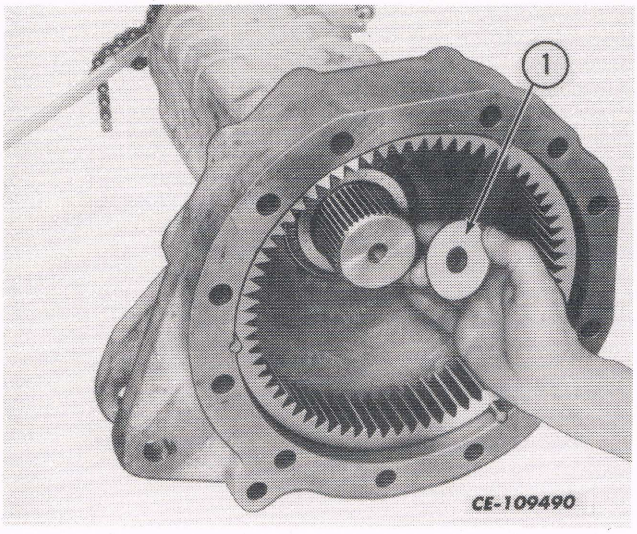

Fig. 16
Installing Shim Pack.

1. Shim pack.

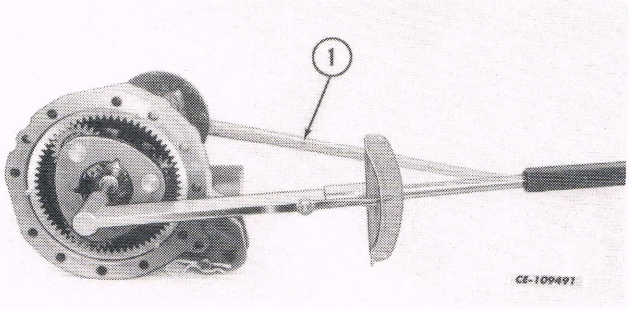

Fig. 17
Torquing Planet Carrier Bolt.

1. Bar.

20. Install the 5/8 NF cap screw that secures the planet carrier to the axle. Use a bar on the axle to hold it while torquing the cap screw to 339 N·m (250 ft-lbs) as shown in Fig. 17.

21. Install the brake outer disc on the dowels of the gear. Refer to "BRAKES" in Section 13.

INSTALLATION

1. Install two aligning dowels in the axle mounting holes in the rear transmission housing.

2. Install a new axle gasket over the dowels.

3. Install the axle housing on the rear transmission housing. Remove the aligning dowels. Torque the axle mounting bolts to 285 - 312 N·m (210 - 230 ft-lbs)

4. Connect the parking brake cable and the hydraulic tubing.

5. Install sheet metal, seat deck and fenders.

6. Install ROPS and loader. Refer to Section 2.

7. Install the rear wheel and torque the wheel mounting nuts to 298 - 325 N·m (220 - 240 ft-lbs).

NOTE: *Check rear wheel mounting nut bolt torque every ten hours of machine operation until the torque stabilizes.*

8. If equipped, install and secure the hitch arm and lower link.

9. Fill the rear frame with lubricant as described in the Operator's Manual.

BRAKES

CONTENTS

GENERAL

Returning fluid from the oil cooler maintains a full master cylinder for both cylinders. This is called our keep fill system.

When pressure is applied to the brake pedal, the push rod of the cylinder contacts the plunger and pushes it through the bore of the cylinder. In the first 0.8 mm (1/32 in) of movement, the center valve seal closes the port to the reservoir and as the plunger continues to move up the bore of the cylinder, the fluid is forced through the line to brake piston.

On the return stroke, the plunger moves back with the return of fluid and the final movement of the plunger lifts the valve seal off the seat, allowing an unrestricted flow of fluid between the system and the brake cylinder reservoir.

A single disc brake, wet type, is located between each axle carrier and the rear transmission frame.

The brake disc is located between the stationary outer disc ring, in the axle carriers and the brake center disc. The brake piston pushes against the brake center disc, which in turn traps the brake disc between the outer and center discs.

Incorporated in the brake system is an equalizer valve. This valve permits equal flow to both brake pistons when both brake pedals are engaged. When one brake is applied, the equalizer does not function, as the brake pedal not being engaged prevents the equalizer spool from removal procedure.

The park brake band and drum is located on the bevel pinion shaft. Section 10 covers the removal procedure.

BRAKE CYLINDERS

The individual brake cylinders and the brake equalizer can be removed separately or as an entire assembly, with their bracket and brake pedals.

> **NOTE:** *The individual brake cylinders and the brake equalizer can be removed separately or as an entire assembly, with their bracket and brake pedals.*

REMOVAL AND INSTALLATION

1. To remove the entire assembly, remove the battery and battery box lower plate. Disconnect the lines to the right and left brakes. Disconnect the oil cooler return line at the hose connection to keep-full line. Disconnect the oil cooler return hose assembly from clutch housing top cover. (See Fig. 1).

2. Remove the capscrews securing the brake cylinders and equalizer bracket to the clutch housing and remove the assembly.

> **NOTE:** *An orifice screen assembly is located in the hose between the inlet from the oil cooler and the keep-full line. The orifice is located with the screen toward the oil cooler return side. This orifice provides the proper amount of fluid to the brake master cylinders.*

3. Reverse the removal proceedure for installation.

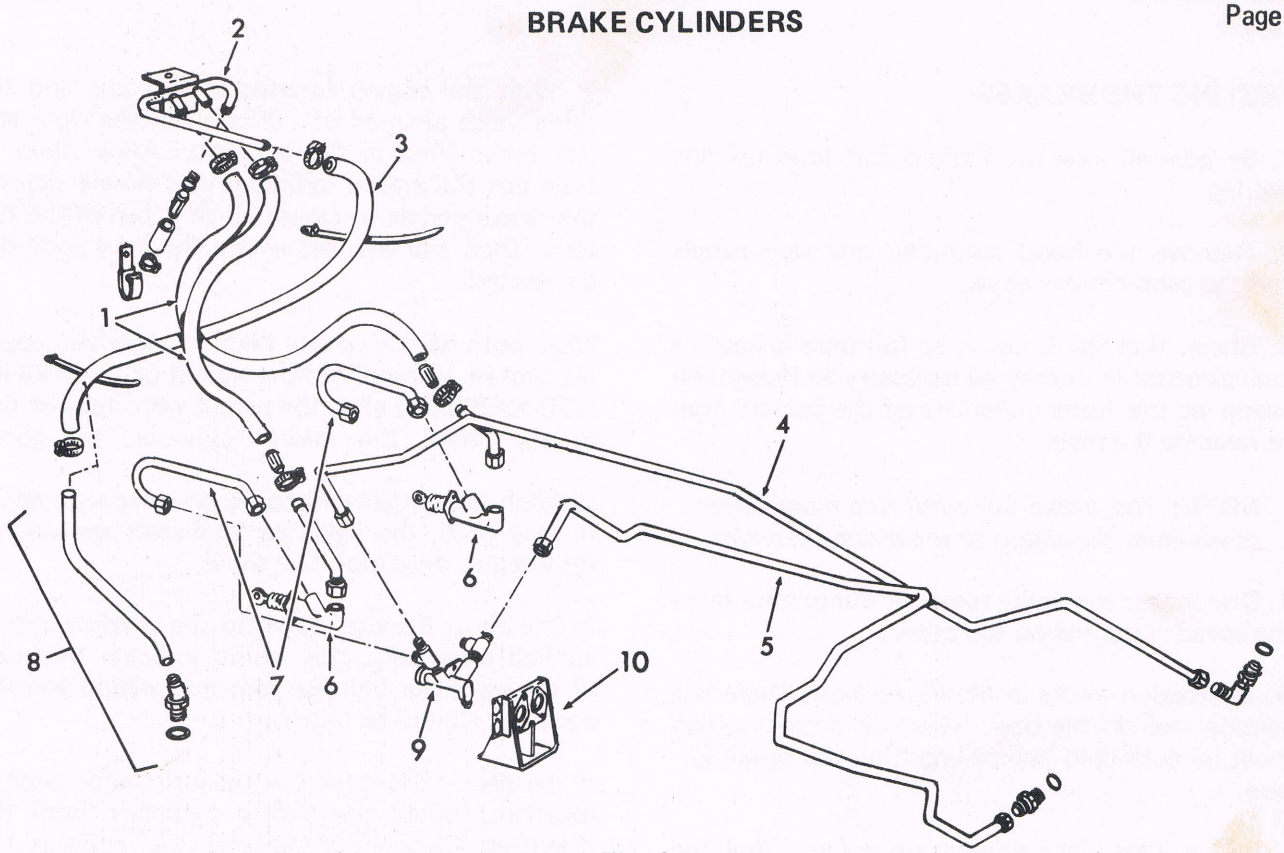

Fig. 1
Hydraulic Tubing.

CE-115639 A

1. Inlet hoses
2. Reservoir supply tube
3. Brake reservoir dump hose
4. Right brake tube
5. Left brake tube
6. Master brake cylinder
7. Equalizer tubes
8. Foot control hydrostatic only
9. Equalizer valve
10. Mounting bracket

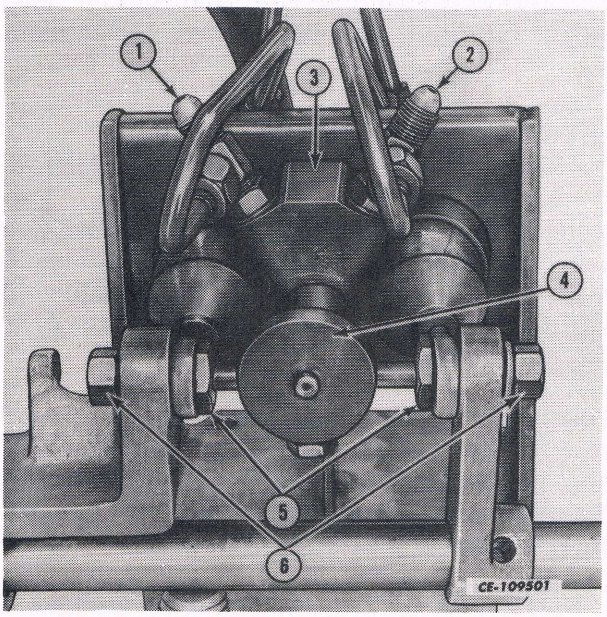

Fig. 2
Brake Equalizer Assembly.

1. Left brake tube
2. Right brake tube
3. Equalizer
4. Equalizer plate
5. Brake pedal adjusting eccentric
6. Lock nut

TESTING THE BRAKES

1. Be sure all external fittings and lines are not leaking.

2. Remove the hood assembly, rear side panels and the center tower cover.

3. Check that the brake keep-full pipe is kept as high as possible. It may be necessary to loosen the clamp at the front underside of the battery tray to relocate the pipe.

NOTE: *The brake keep-full line must slope down from the clamp to the master cylinder.*

4. Disconnect the brake reservoir dump hose from the speed transmission top cover.

5. If aeration exists in the dump hose, there is a suction leak in the basic hydraulic system which must be corrected before checking the brake system.

a. Check the hoses from the keep-full line to the master cylinders and the hose from the oil cooler return tube to the keep-full line for suction leaks.

b. Disconnect the IPTO (if equipped) tube between the rear frame and the MCV and cap at the MCV. This will eliminate the possibility of a suction leak in the IPTO side of the MCV.

c. Apply petroleum jelly or grease around the filter case gasket and the filter case seal "O" ring.

If aeration still exists, the MCV must be removed to check the gasket and "O" ring between the rear frame and MCV for a suction leak.

6. With the engine operating at rated speed and the brake pedals depressed, measure the fluid out of the dump tube. If between .473 litre (1 pint) and .95 litre (1 quart) of fluid is obtained in three minutes, the keep-full supply is within specifications. If not within specifications, check the orifice screen assembly in the short hose from the oil cooler return line for restriction. Also the cooler by-pass valve may not be working properly or the IPTO (if equipped) is not fully disengaged. Reconnect the dump hose.

7. With the engine running at low idle and the dump hose pinched off, disconnect the right and left brake lines at the equalizer. Allow fluid to flow out the master cylinders and slowly depress the brake pedals to assure all air is out of the system. Then cap the tees where the lines were disconnected.

With both brake pedals latched together, apply the brakes. If they hold the weight of 77 to 99 Kg (170 to 200 lbs) after the pedals were applied five or six times, the master cylinders are good.

Unlatch the pedals and apply pressure separately. If they hold, the equalizer ball seats are sealing. Repeat this operation five times.

If one pedal does go down to the platform when applied separately, this would indicate that side of the equalizer ball seat was not sealing and the equalizer should be replaced.

If the pedals did go to the platform when latched together, isolate the master cylinders from the equalizer. Disconnect the equalizer tube at the equalizer end, bleed all the air out of the cylinders while operating at low idle and plug the tubes using 6.4 mm (1/4 inch) tube plugs. Depress the pedals separately. The master cylinder that does not hold must be replaced.

If both master cylinders check to be good, the equalizer valve could be leaking externally which should be visible and will require replacement.

PRESSURE CHECKING THE BRAKE PISTON ASSEMBLY IN THE AXLE CARRIER

Using hydraulic hand test pump PLT-859-1 with 1/4 inch tube and a 1/4 inch NPT connector (317 783 R1), apply 4.137 MPa (600 psi) pressure through the brake lines at the master cylinder individually.

This check covers the sealing of the Teflon seal between the rear frame and top cover, two "O" rings on the brake piston, the "O" ring in back of the differential bearing carrier, the "O" ring into the rear frame and external fittings.

NOTE: *The "O" ring in back of the differential carrier could have a suction leak which will not show up in this test.*

BRAKE DISCS AND PISTONS

REMOVAL

1. Remove the rear axle carrier assembly (Refer to Section 12).

2. Remove the planetary drive shaft (6). Remove the brake disc (8) from the shaft. See Fig. 3.

NOTE: *The right planetary drive shaft is longer than the left due to the differential lock.*

3. Install screws (1) in the three tapped holes provided in the brake piston. Using a screwdriver, pry on the underside of the screw heads equally all the way around to remove the brake piston. See Fig. 5.

4. Remove and discard the "O" rings.

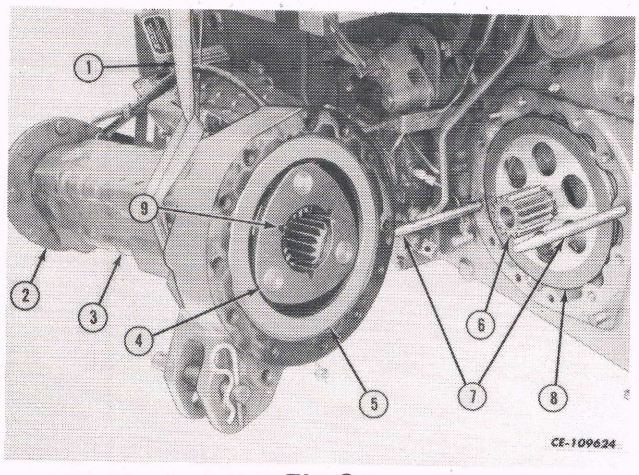

Fig. 3
Removing Rear Axle Carrier.

1. PLT-120-2
2. Axle flange
3. Rear axle carrier
4. Planetary gear carrier
5. Brake outer disc ring
6. Planetary drive shaft
7. FES 10-21
8. Brake disc
9. Capscrew

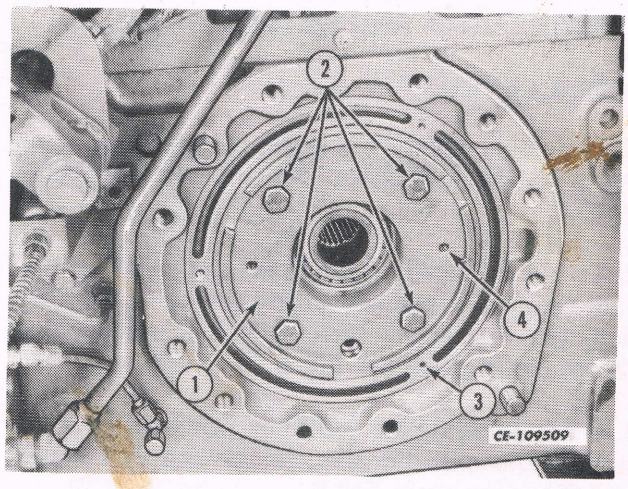

Fig. 4
Differential Carrier and Brake Piston.

1. Carrier
2. Differential bearing carrier capscrew
3. Brake piston
4. Jack screw holes for carrier

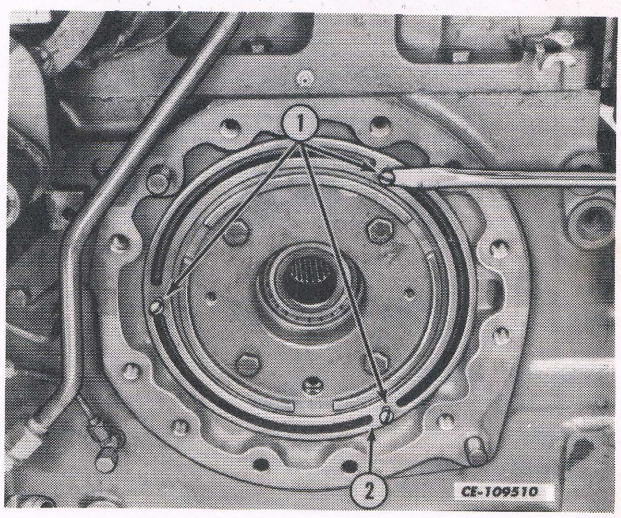

Fig. 5
Removing Brake Piston.

1. Slotted screws
2. Brake piston

BRAKE DISCS AND PISTONS – Continued

INSTALLATION

1. Before installing the brake piston, thoroughly lubricate the new piston "O"ring with petroleum jelly.

2. To aid in installing the brake piston and eliminate cocking of the piston and damaging the "O" ring, the PLT-700-7 brake piston installing tool (2) should be used. See Fig. 6.

3. Using three of the 5/8" hex bolts used for installing the axle housing, install the PLT-700-7 tool (2) as shown in Fig. 6.

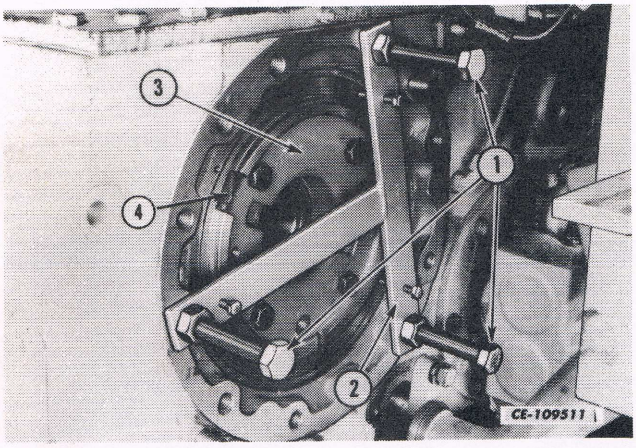

Fig. 6
Brake Piston Tool.

1. 5/8" hex bolts
2. PLT-700-7 brake piston tool
3. Carrier
4. Lug seat notch

4. When installing the planetary drive shaft and brake disc, install the drive shaft in the planetary gear carrier and install the brake disc on the drive shaft. Then install the carrier assembly on the rear frame. This prevents the brake disc from slipping out of position.

Check the brake piston assembly for leakage. Refer to "Pressure Checking Brake Piston Assembly in Axle Carrier" in this section.

BLEEDING THE BRAKES

Any time the brake circuit has been opened, the brakes must be bled. If a repeat bleeding operation is required after being properly bled, the brake testing procedure must be made. Refer to "Testing the Brakes" in this section.

1. Bleed the brakes. Refer to the machine operators manual.

PARKING BRAKE ADJUSTMENT

1. Adjust pivot nut until a 311 ± 9 N (70 lbf) ± 2 lbf), pull is required to move park brake handle between the fifth and fourth notch from the top. Tighten jam nut against pivot nut.

2. Apply International 251H EP grease to the spherical surface of the cable pivot nut when installing the parking brake cable.

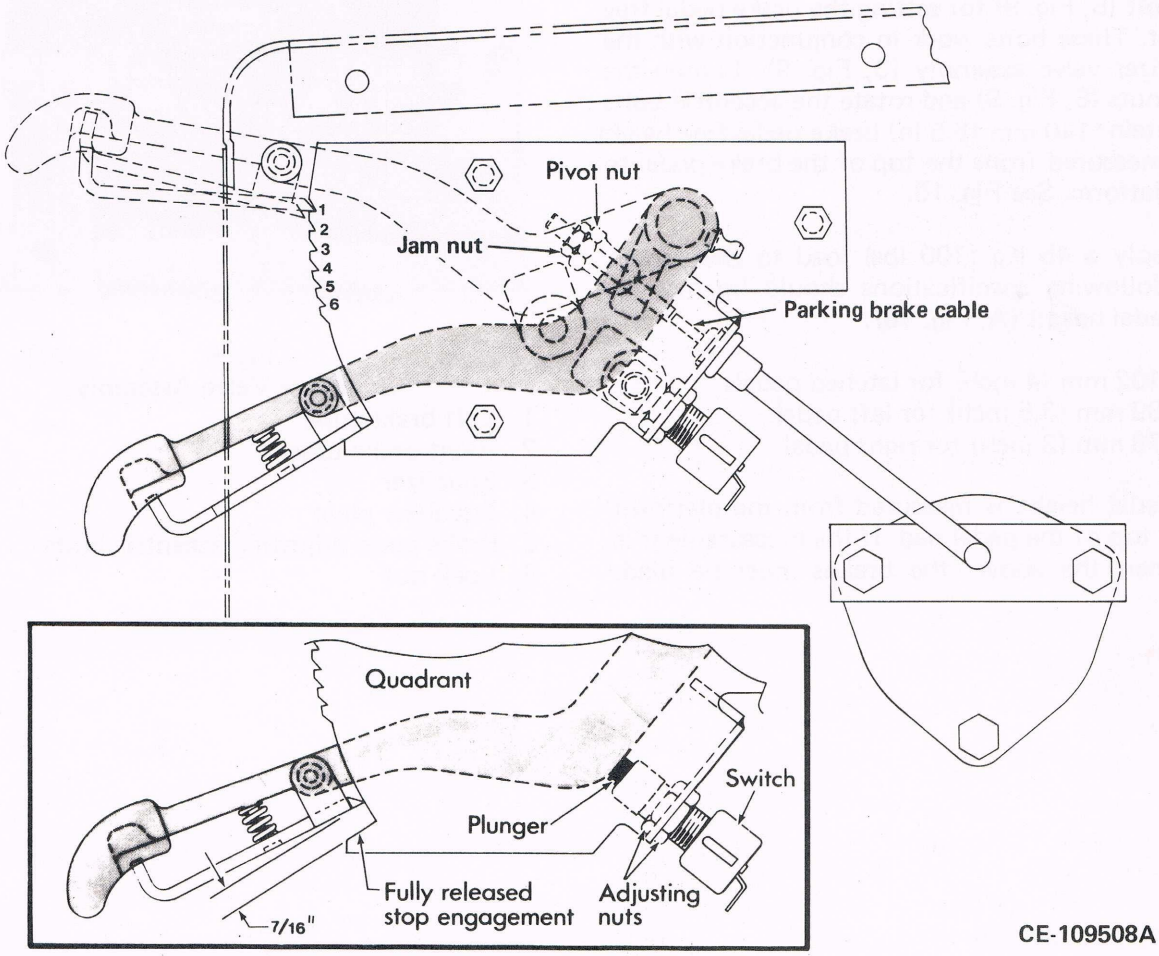

Fig. 7
Parking Brake Adjustment.

PARKING BRAKE WARNING LIGHT SWITCH SETTING

With park brake handle set 11 mm (7/16") from fully released stop setting on quadrant, adjust switch so that the plunger just contacts the brake handle and lock in position.

BRAKE PEDAL ADJUSTMENT

1. Each brake pedal has a special eccentric adjusting bolt (5, Fig. 9) for setting the brake pedal free height. These bolts work in conjunction with the equalizer valve assembly (3, Fig. 9). Loosen the lock nuts (6, Fig. 9) and rotate the eccentric bolts to obtain*140 mm (5.5 in) brake pedal free height (A), measured from the top of the brake pedal to the platform. See Fig. 10.

2. Apply a 45 Kg (100 lbs) load to the pedals. The following specifications should be met for the pedal height (A, Fig. 10):

* 102 mm (4 inch) for latched pedals
* 89 mm (3.5 inch) for left pedal
* 76 mm (3 inch) for right pedal

The pedal height is measured from the platform to the top of the pedal pad. If the measurement is less than the above, the brakes must be bled.

NOTE: *The latching action must not move either pedal relative to the other.*

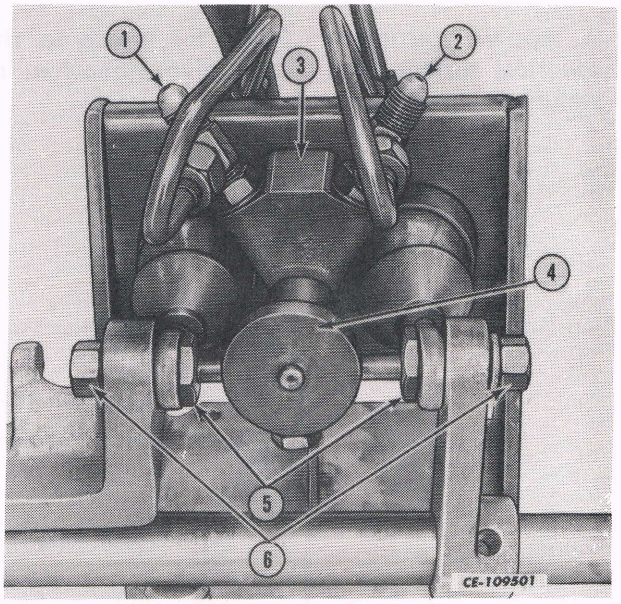

Fig. 9
Equalizer Valve Assembly.

1. Left brake tube
2. Right brake tube
3. Equalizer
4. Equalizer plate
5. Brake pedal adjusting eccentric bolts
6. Lock nut

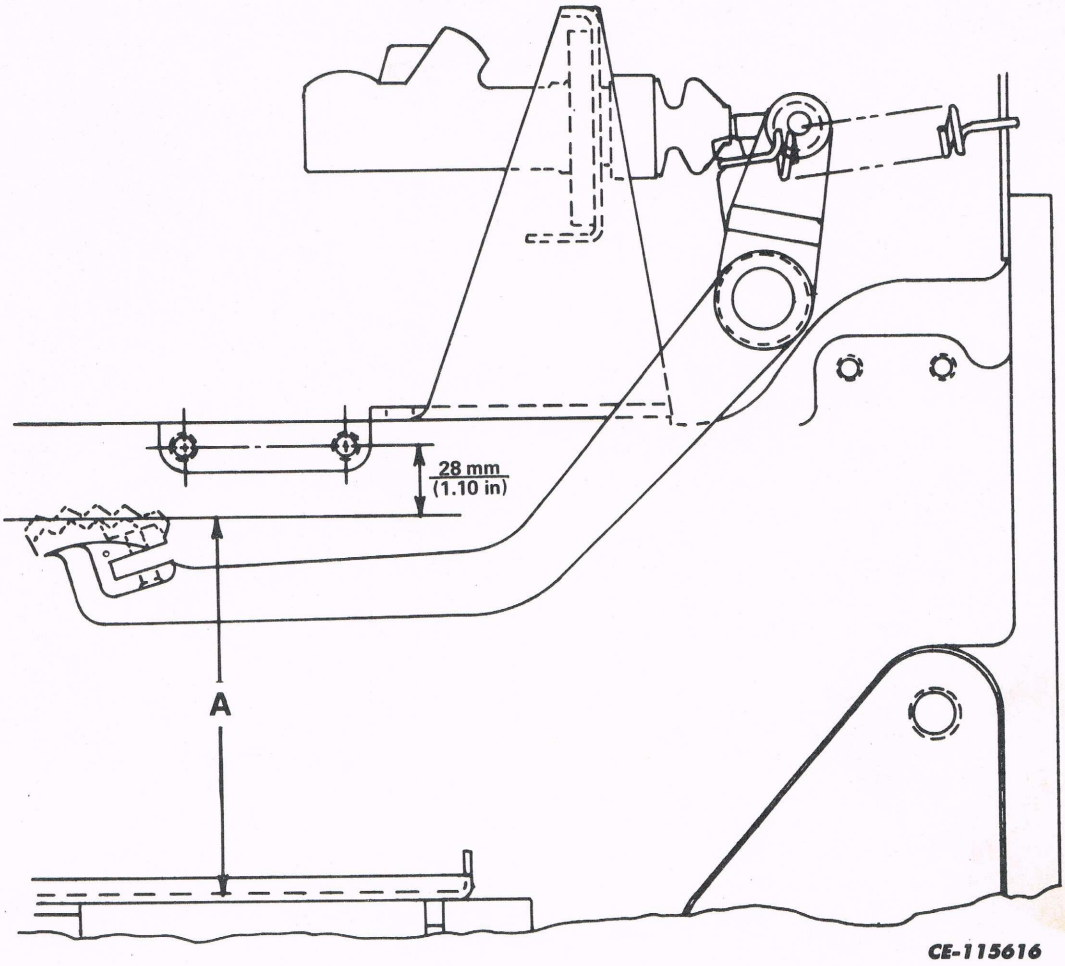

Fig. 10
Right Side View.

CONTENTS

INDEPENDENT POWER TAKE OFF

SPECIFICATIONS

Type	Independent
Driven from	Splined hub on clutch back plate
Lubrication	In Hy-Tran in rear frame
Type	Multiple disc, wet clutch
Control	Hydraulic, 1378-1585 kPa (200-230 psi)
Piston Return Springs:	
Number of Coils	9
Free Length - Inches	1-3/8
Test Length and Load - Inch	1-1/32 @ 35 lbs

GENERAL

The IPTO is driven by the engine clutch backplate, in the clutch housing, to the lower shaft that runs inside the lower countershaft through the speed and range transmission.

Splined to the end of the PTO driven shaft assembly is a 55 tooth gear assembly that drives the hydraulic and lubricant pumps. The same gear assembly has an internal spline that drives the IPTO unit when hydraulically actuated.

Hydraulic pressure of 1378-1585 kPa (200-230 psi) is applied from the Multiple Control Valve assembly when actuated. This fluid is supplied through a cored passage in the rear frame to the IPTO drive shaft and clutch piston.

The 540 rpm shaft, with 6 splines, is driven through an idler gear from the IPTO drive shaft.

The IPTO shaft protection tube assembly must be threaded into the bearing flange if the shaft is not being used.

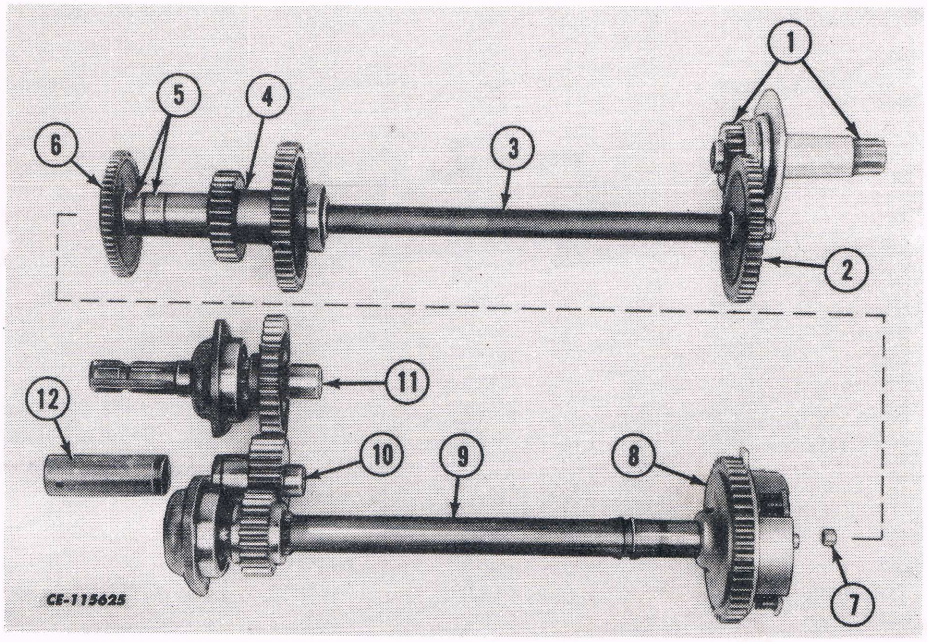

Fig. 1
IPTO Drive Assembly.

1. Engine drive shaft (upper)
2. PTO driven gear
3. PTO driven shaft (lower)
4. Countershaft drive of range transmission (for F & R)
5. Needle bearings support countershaft and 55T gear assembly
6. Hydraulic pumps and clutch drive gear 55T (splined to clutch hub)
7. Pilot needle bearing for IPTO shaft
8. Clutch cup gear with clutch assembly
9. IPTO drive shaft
10. Idler gear
11. 540 rpm output shaft
12. Output shaft protector

REMOVAL

1. Before removing the IPTO, drain the hydraulic fluid from the transmission. Refer to Operators Manual.

2. Remove the side IPTO cover. Discard the gasket.

3. Drive the roll pin (1, Fig. 2) from the clutch cup gear (4) and drive shaft. (2)

4. Remove the bearing flange with gasket from the IPTO drive shaft. (1, Fig. 3)

5. Remove the drive shaft assembly.

   NOTE: *It is not necessary to remove the drive shaft and clutch assembly to remove the idler gear with shaft or the 540 rpm output shaft.*

6. To remove the idler gear and 540 rpm output shaft.

   a. Remove all necessary hydraulic tubes and linkage.

   b. Remove the draft control housing or rear transmission cover using a suitable hoist. Discard gasket and teflon seals.

   c. Remove the output bearing flange with protector. Discard gasket.

   d. Remove the retaining ring from behind the output shaft driven gear.

   e. Support the driven gear and pull output shaft out.

   f. Remove the drive shaft bearing flange and discard the gasket.

   g. Install a bolt into the idler gear shaft and supporting the idler gear pull the shaft out using pliers. Discard the "O"ring on the shaft.

   h. Remove and discard the seal from the output shaft.

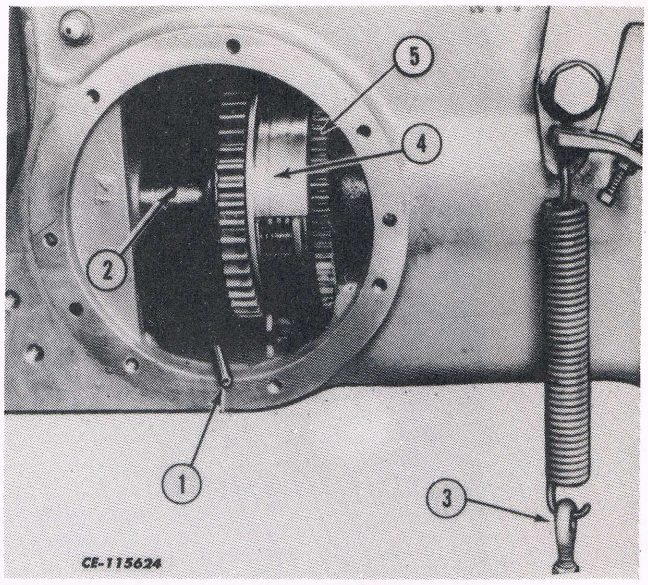

Fig. 2
IPTO Clutch Pack.

1. Roll pin
2. Drive shaft
3. Eye hook
4. Clutch cup gear
5. Drive gear for lubrication pump and MCV hydraulic pump

INDEPENDENT POWER TAKE-OFF

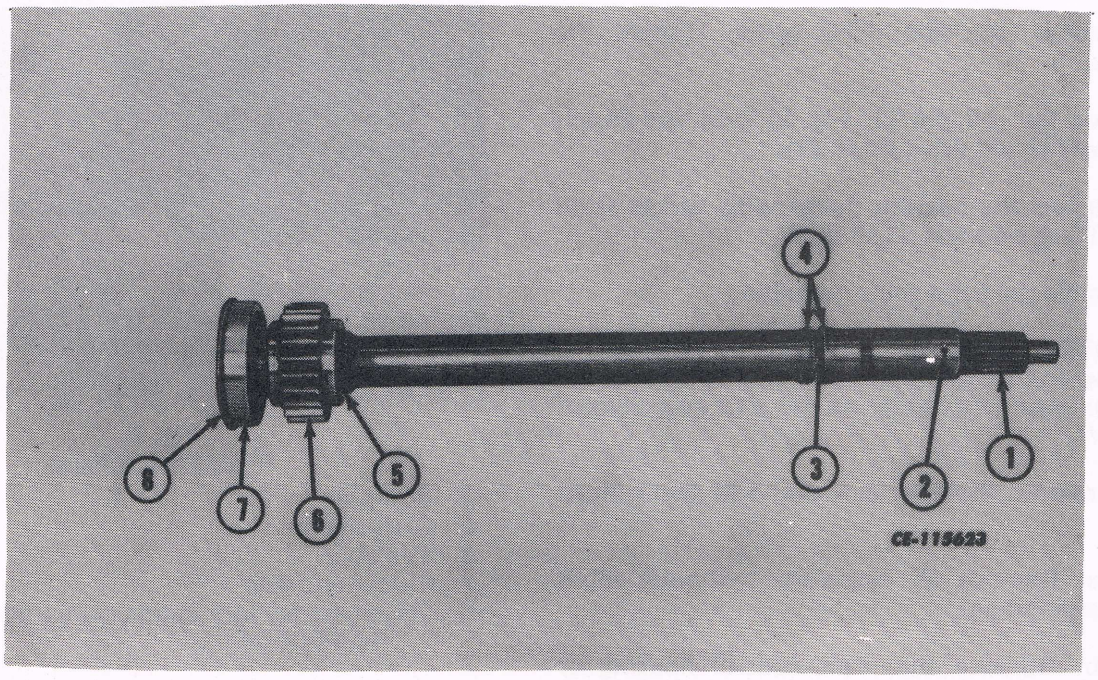

Fig. 3
Output Shaft Assembly.

1. Drive shaft
2. Clutch pressure port to clutch piston
3. Clutch pressure inlet passage from multiple control valve
4. Shaft sealing rings (2)
5. Snap ring
6. Lower drive gear
7. Ball bearing
8. Snap ring

DISASSEMBLY

1. Using a pair of "C" clamps (A), compress the six piston return springs (3) and remove the retainer ring (1). See Fig. 4.

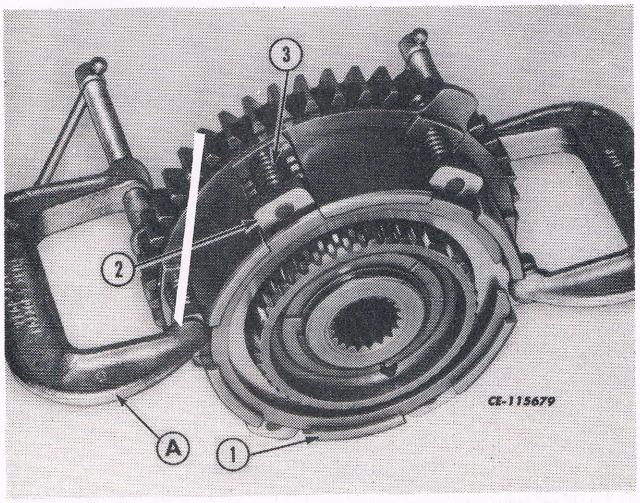

Fig. 4
Dissaembly of Clutch Pack.

1. Retainer ring
2. Backing plate
3. Spring

2. Remove the backing plate (2), springs (3), clutch discs (4), clutch plates (5), piston return plate (6) and brake ring (7). See Fig. 5.

3. Remove the smaller snap ring (8), thrust washer (9) and hub assembly (10). See Fig. 6.

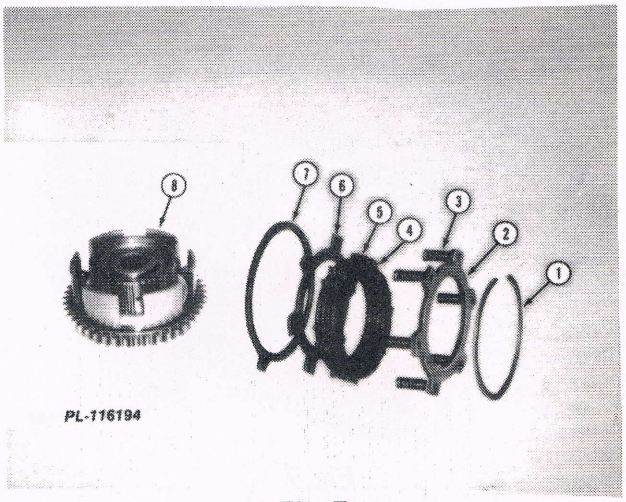

Fig. 5

1. Snap ring
2. Backing plate
3. Spring
4. Clutch disc
5. Clutch plates
6. Piston return plate
7. Brake ring

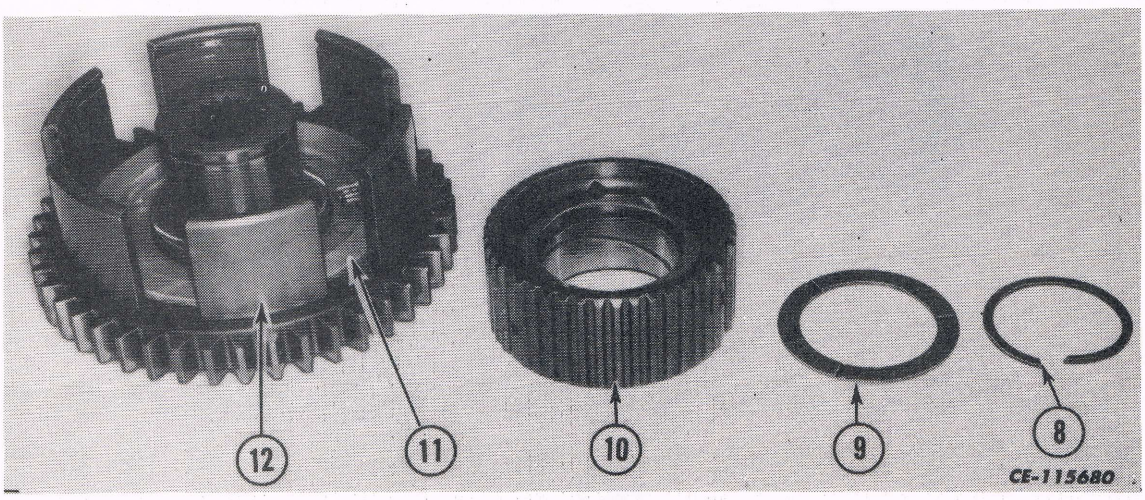

Fig. 6
Clutch Cup Gear Assembly.

8. Snap ring
9. Thrust washer
10. Hub assembly
11. Piston
12. Clutch cup gear

4. There is a hole (B) in the bore of the clutch cup gear (12). Insert an air hose in this hole and force the piston (11) out. See Figs. 7 and 8.

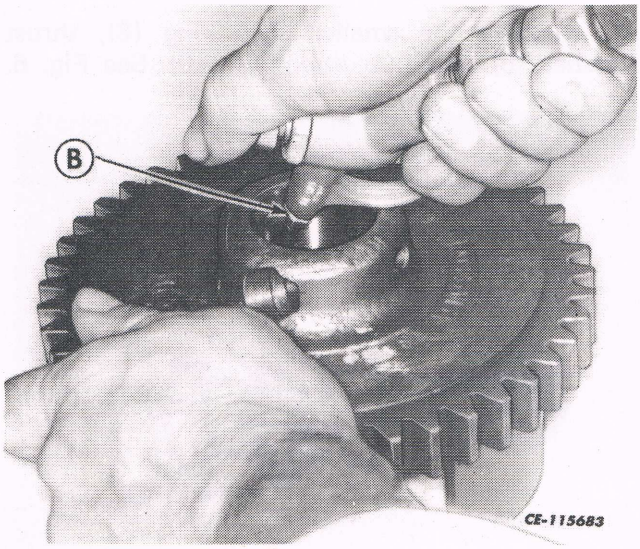

Fig. 7
Inserting Air Hose.

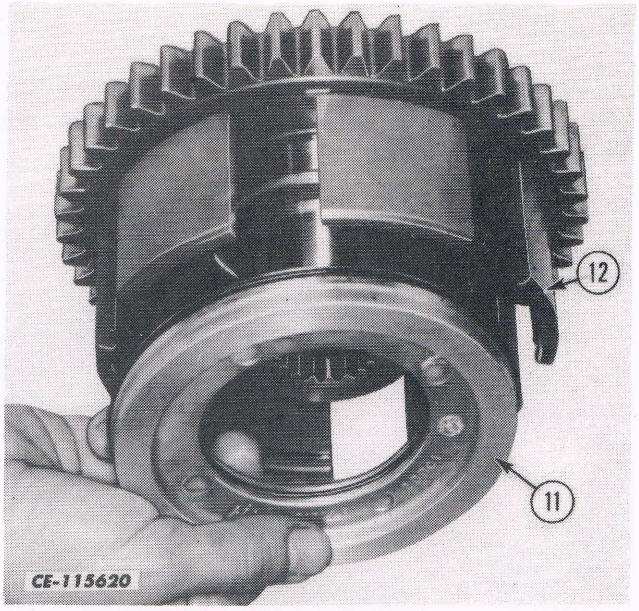

Fig. 8
Removing the Piston.
11. Piston 12. Clutch cup gear

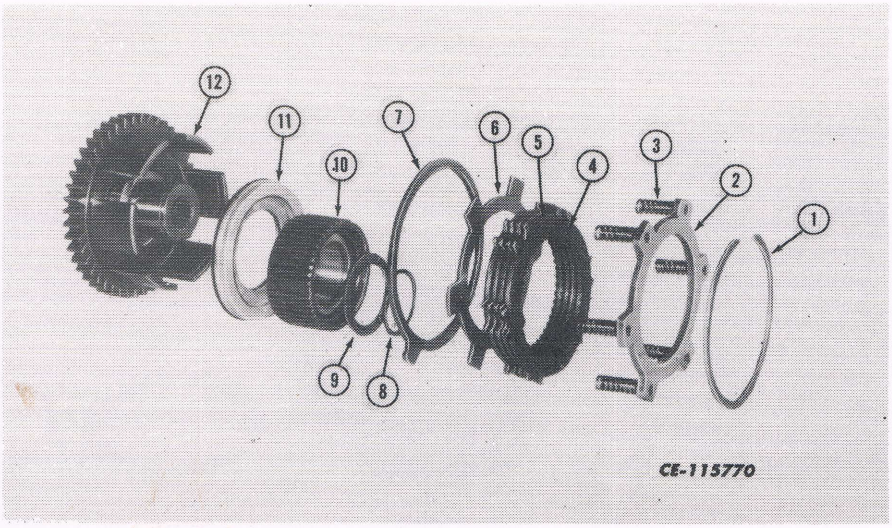

Fig. 9
IPTO Clutch Assembly.

1. Snap ring
2. Backing plate
3. Piston return spring
4. Clutch disc
5. Clutch plate
6. Piston return plate
7. Brake ring
8. Snap ring
9. Thrust washer
10. Hub assembly
11. Piston w/seal rings
12. Clutch cup gear

INSPECTION AND REPAIR

1. Bearings, seals, related clutch parts and springs showing wear or damage should be replaced. The bushing for the drive shaft in the differential compartment front wall should be replaced when a new output shaft is required or if the sealing rings have grooved the bushing.

2. Fig. 10 covers the drive shaft bushing installation. Use OTC driver with 40 mm (1-9/16 in) pilot, 38 mm (1-1/2 in) spacer and 50.8 mm (2 in) driven disc.

Bottom out bushing as shown in Fig. 10. For needle bearing installation, use OTC driver with 38 mm (1-1/2 in) pilot and 48 mm (1-7/8 in) driven disc. Position to within 1.59 ± 0.8 mm (1/16 ± 1/32 in) of the front face of the bushing.

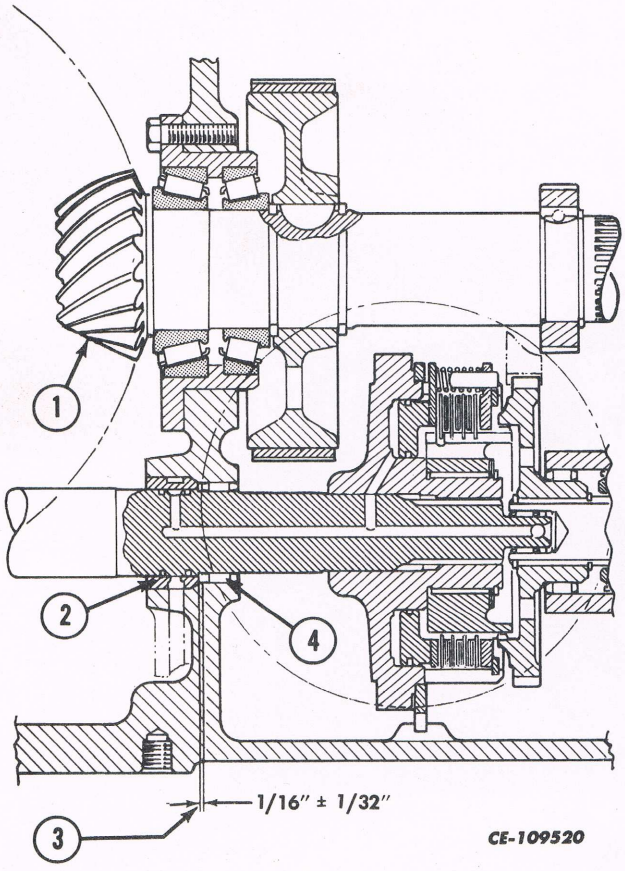

Fig. 10
Drive Shaft Bushing Installation.

1. Pinion
2. Bushing
3. 1.59 ± 0.8 mm (1/16 ± 1/32 in)
4. Needle bearing

3. To install the IPTO drive shaft needle bearing, use OTC driven with 14.3 mm (9/16 in) pilot and 19 mm (3/4 in) driven disc. Position the needle bearing in 0.8 mm (1/32 in) from end of PTO shaft face.

4. Install the shaft bearing flange seal. Use a driver plate of 59 mm (2-5/16 in) diameter, and bottom the seal.

5. Inspect the clutch piston seal rings and replace them if necessary. See Fig. 12.

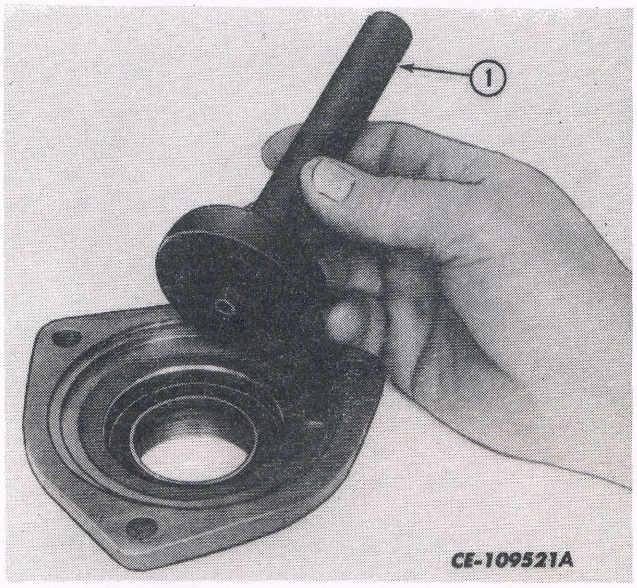

Fig. 11

1. PLT-104-1.

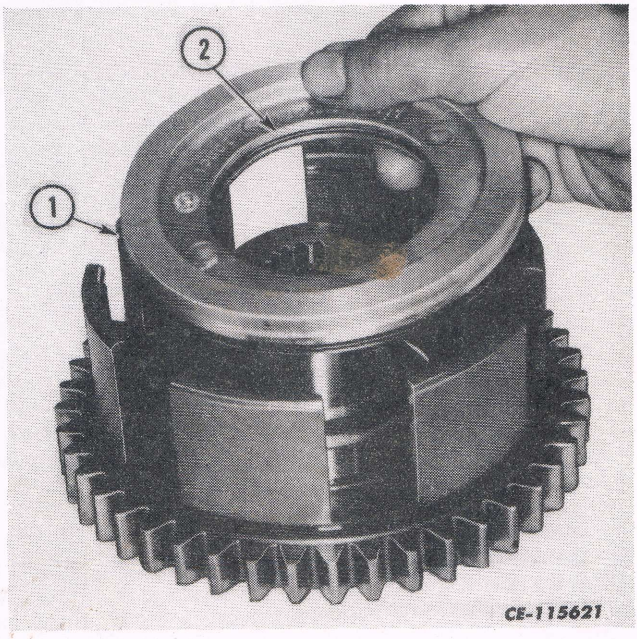

Fig. 12
Inspect Piston Seals.

1. OD seal ring
2. ID seal ring

REASSEMBLY

1. Install the ID (C) and OD (D) sealing rings onto the clutch piston (11), using petroleum jelly. See Fig. 13.

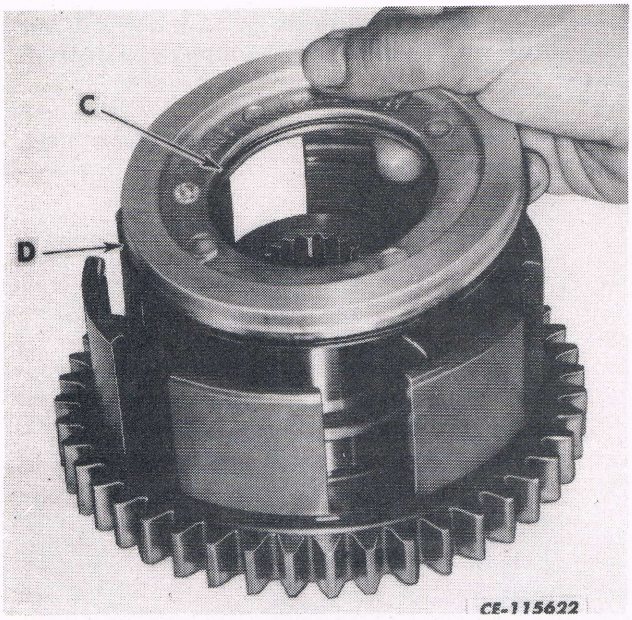

Fig. 13
Installing the Piston Seals.

2. Position the piston in the clutch cup gear. Install hub on to clutch cup gear. Place a block of wood over the hub and tap until piston seats.

3. Install thrust washer (9, Fig. 14) with snap ring (8) to clutch cup gear.

4. Install the brake ring (7) and piston return plate (6).

5. Install the clutch driven discs (4), and between each driven disc, install two clutch driven plates (5).

6. Install the backing plate (2) with the six return springs (3).

7. Using the "C" clamps, compress the return spring so that the snap ring can be installed.

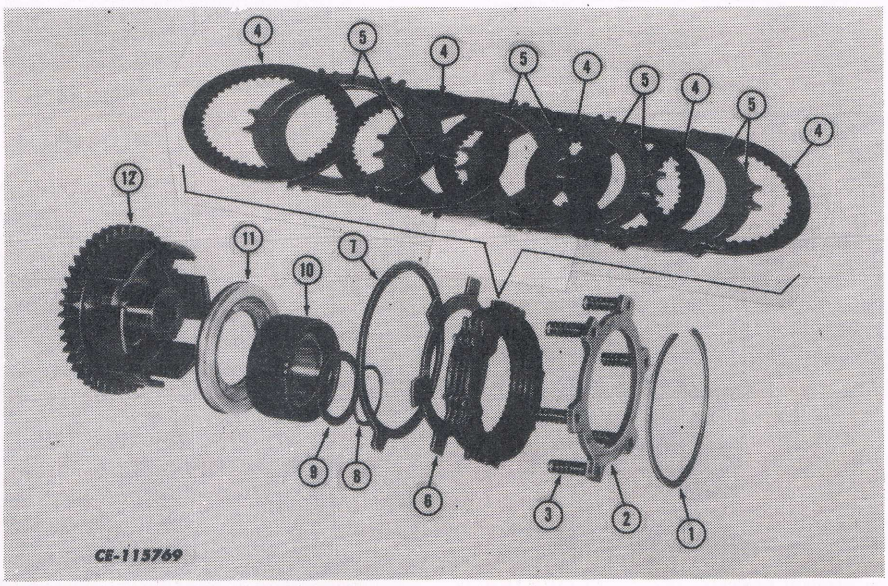

Fig. 14
Clutch Assembly

1. Snap ring
2. Backing plate
3. Spring
4. Clutch disc
5. Clutch plates
6. Piston return plate
7. Brake ring
8. Snap ring
9. Thrust washer
10. Hub
11. Piston
12. Clutch cup gear

REASSEMBLY - **Continued**

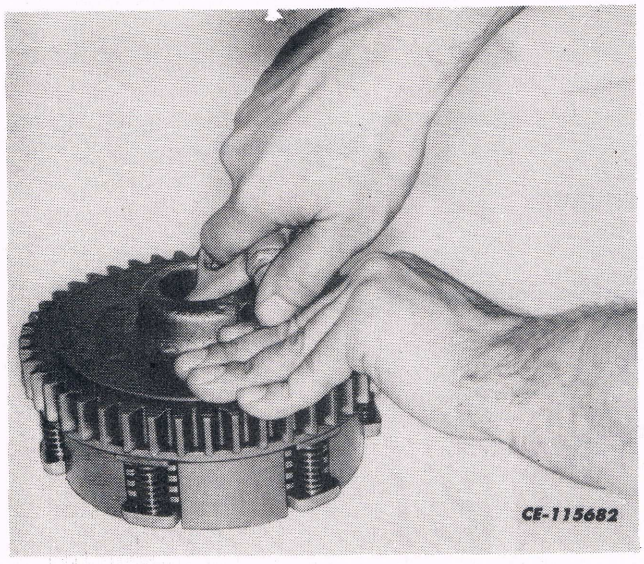

Fig. 15
Checking the Piston Seal.

8. Using air pressure in the hole (A) in the bore of the clutch cup gear, check the operation of the clutch piston for cut sealing rings. See Fig. 15.

9. Reinstall the output shaft (1). See Fig. 16.

10. Install the clutch assembly to the drive shaft being carefull not to damage the seal rings or bushing.

NOTE: *In order to install the clutch assembly, it will be necessary to align the groove (2) on the drive shaft (1) as well as the splines. Keep the roll pin hole (3) in an accesible position. Once the clutch assembly is secured to the shaft, rotation in the housing is limited. See Fig. 16.*

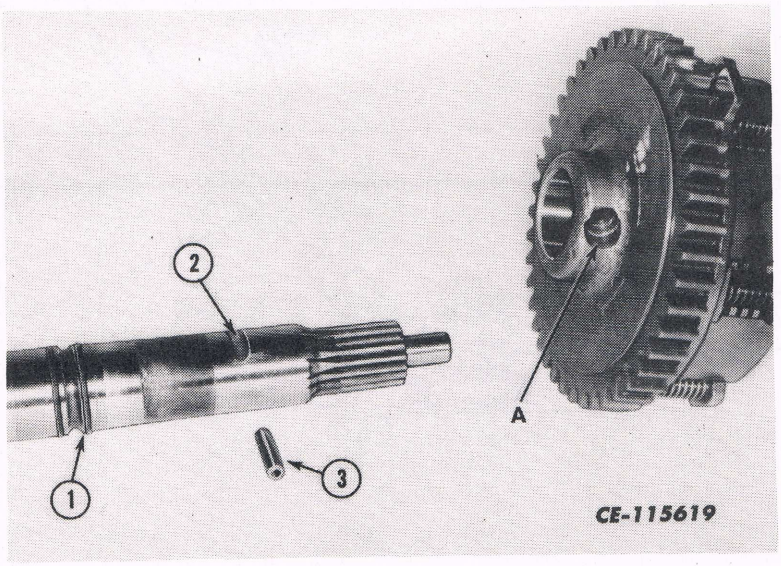

1. Output shaft
2. Shaft groove
3. Roll pin

Fig. 16.
Alignment of Shaft and Clutch

11. Install the side PTO cover plate with new gasket.

12. If removed, install idler gear and shaft with new "O"ring. Once started tap the idler shaft gently till flush with transmission housing. When installing shaft make sure the groove in shaft alligns with the drive shaft bearing flange. Install bearing flange with new gasket.

13. Install the output shaft, with gear and snap ring. Install ouput bearing flange with new seal with protector.

14. Install the draft control housing or rear transmission cover with new gasket and telfon seals.

15. Install the hydraulic tubes and linkage that were removed. Adjust the IPTO linkage. Refer to "Adjusting Linkage" in this section.

16. Refill the transmission. Refer to Operators Manual.

REASSEMBLY - Continued

ADJUSTING LINKAGE

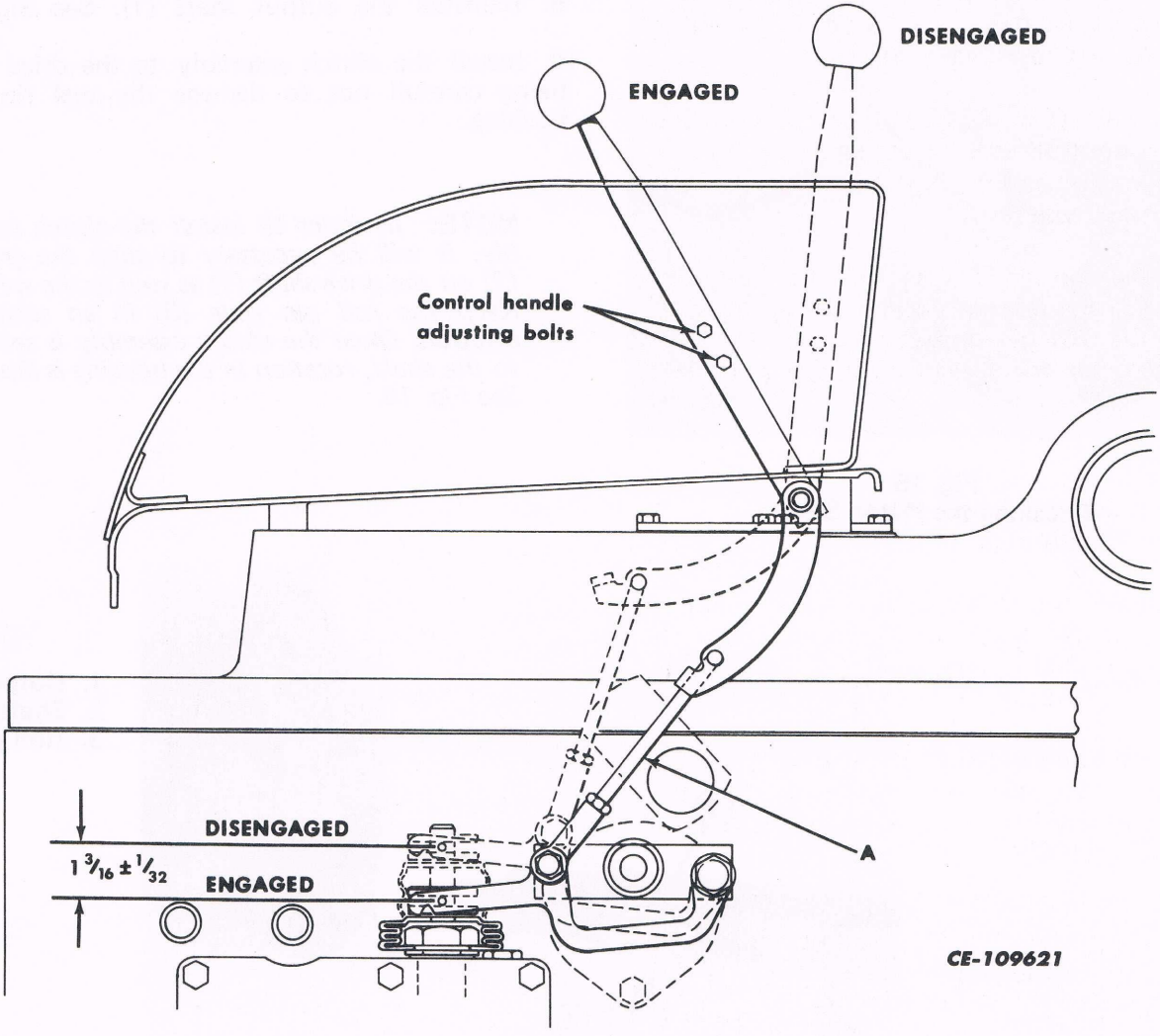

Fig. 17
Lever Adjustment.

ADJUSTING LINKAGE - Continued

With the IPTO control handle bolts loose, adjust the linkage at point "A" so that the IPTO stem is moved 30 mm ± 0.8 mm (1-3/16 ± 1/32 in) from the disengaged position when linkage is moved to the engaged position (over center).

Place the linkage in the disengaged position and adjust the control lever to the center of the disengaged position notch. Tighten the bolts in the control handle assembly.

Position the control lever against the feathering notch. When the lever is released, it should return freely to the disengaged position notch. The pressure at the rear frame tee connection must be 0 kPa (0 psi).

TESTING AND SETTING IPTO LOCK UP PRESSURE

1. Disconnect the IPTO pressure tube assembly (1) from the 1/4" tee in the rear frame. Install 0 - 2068 kPa (0 - 300 psi) gauge PLT-860-4 (3) with connector PLT-861-3 (2). See Fig. 19.

2. Before starting the test, be sure all bolts and connections are securely tightened. Fill the system with Hy-Tran to the proper level with fluid at 38°C (100°F).

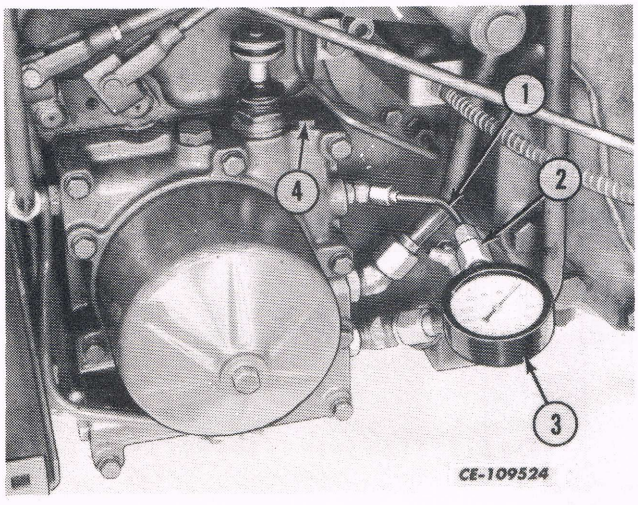

Fig. 18
MCV Valve and Filter.

1. IPTO pressure tube assembly
2. PLT-861-3
3. PLT-860-4
4. IPTO pressure regulating valve plug

3. Engage the IPTO and operate the engine at 2200 rpm for machines with synchromesh transmissions, 2400 rpm for hydrostatic transmission.

4. If the pressure reading is less than 1379-1585 kPa (200 - 230 psi) remove the plug and install shim(s) (1) under the pressure regulating valve plug (4) until pressure is within specifications. See Fig. 19 and 20.

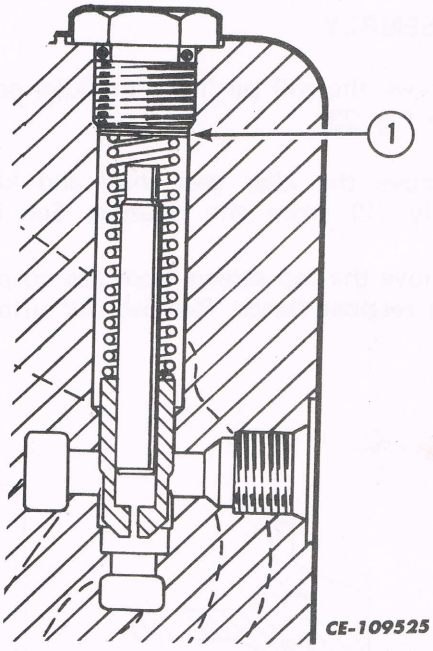

Fig. 19
Pressure Regulating Valve.
(Four-Port Steering).

1. Shims

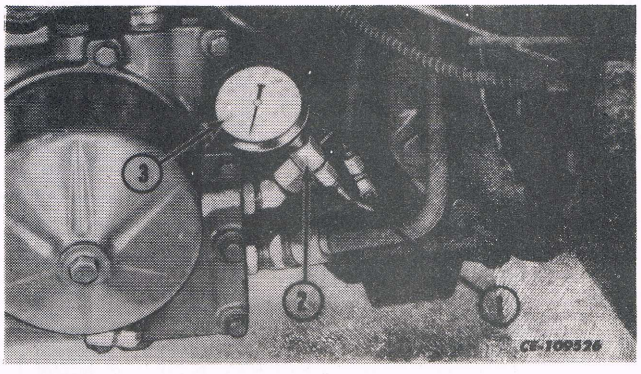

Fig. 20
IPTO Testing Tools.

1. PLT-858-4
2. PLT-861-3
3. PLT-860-4

5. After establishing 1379 - 1585 kPa (200 - 230 psi) specification, remove the gauge and connect the IPTO pressure tube to the tee. Remove the cap from the tee and connect tube assembly PLT-858-4 (1) with gauge in its place. Operate the IPTO in the full engagement position and the 1379 - 1585 kPa (200 - 230 psi) IPTO should be obtained if the sealing rings in the IPTO clutch piston and sealing rings with the drive shaft bushing are sealing properly. See Figs. 19 and 21.

SIDE DRIVE POWER TAKE-OFF (Tractors Only)

DISASSEMBLY

1. Remove the roll pin from the idler gear shaft (1). See Fig. 23.

2. Remove the idler gear shaft and idler gear assembly (2) from the housing. See Fig. 23.

3. Remove the cap screws from the output shaft bearing retainer flange. Remove the output shaft (3) with bearing retainer flange, seal and bearing. See Fig. 23.

NOTE: *The detent balls will fall out of the grooves in the PTO gear when the shaft is removed from the gear.*

4. Remove the pipe plug (4) and drive the roll pin from the selector fork shaft and remove the shaft from the fork assembly. See Figs. 23 and 24.

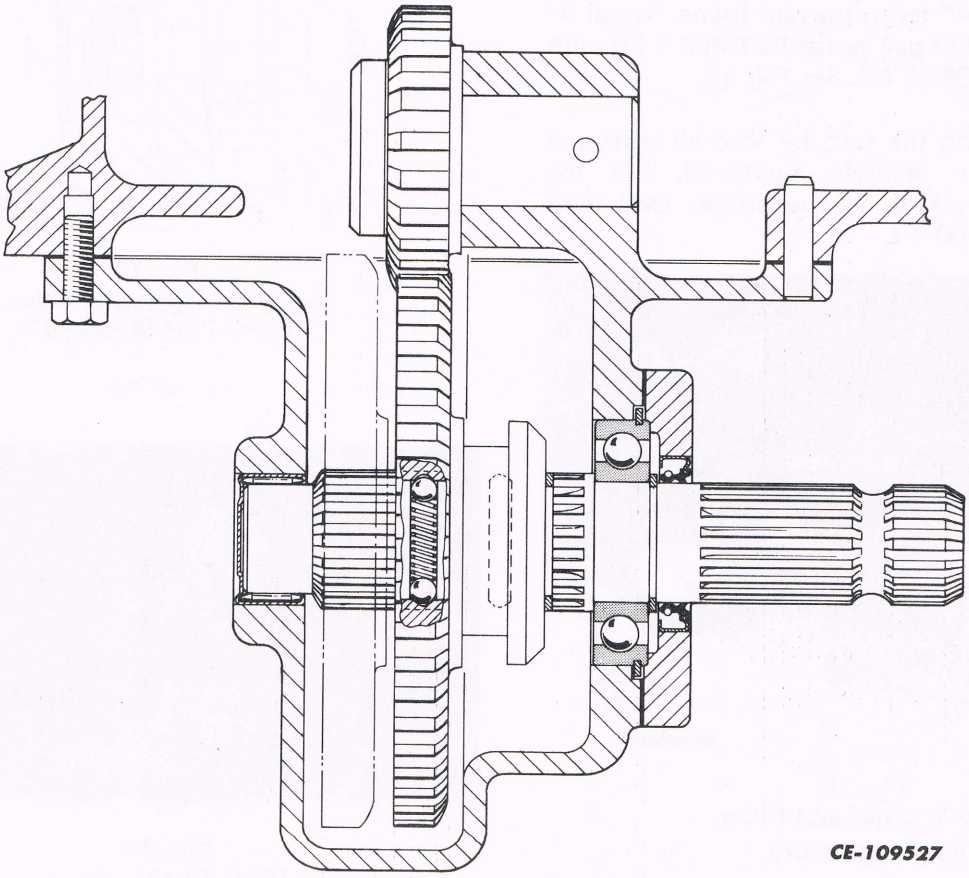

Fig. 21
Side Power-Take Drive.

DISASSEMBLY - Continued

5. Remove the fork assembly (1) and the side PTO gear (2) from the housing. See Fig. 24.

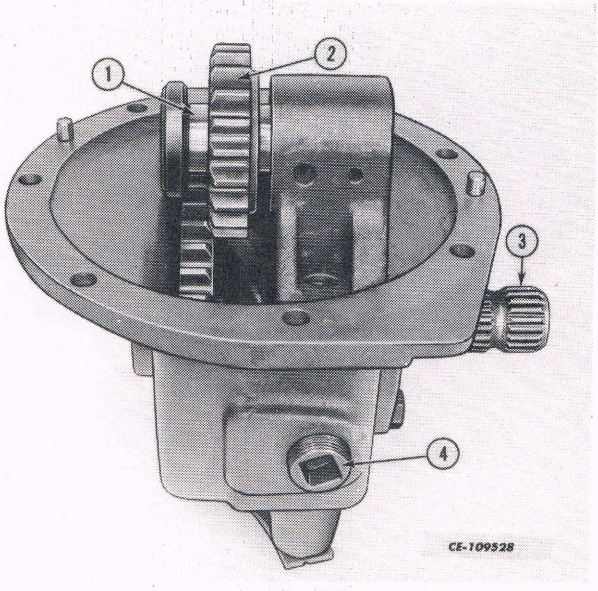

Fig. 22
Idler Gear and Housing.

1. Idler gear shaft
2. Idler gear assembly
3. Output shaft
4. Pipe plug

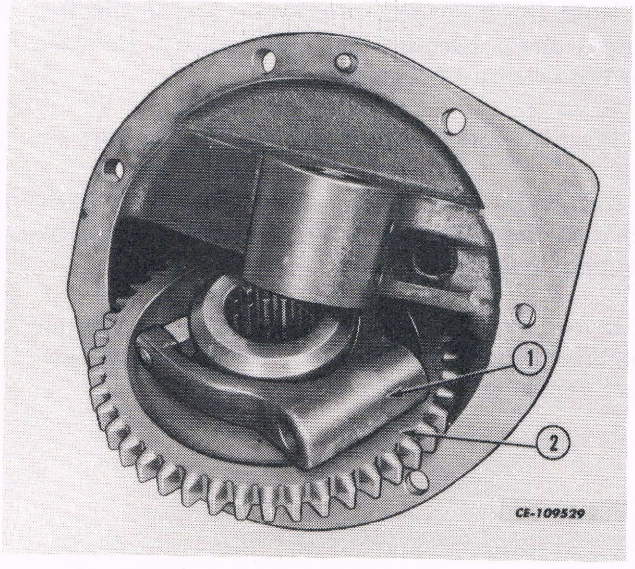

Fig. 23
Removing Selector Fork and PTO Gear.

1. Selector fork assembly
2. PTO gear

INSPECTION AND REPAIR

1. If the output shaft needle bearing is to be replaced, press out the old bearing and press a new one in place. The bearing must be 97 ± .8 mm (3-13/16 ± 1/32 in) from the bearing flange face.

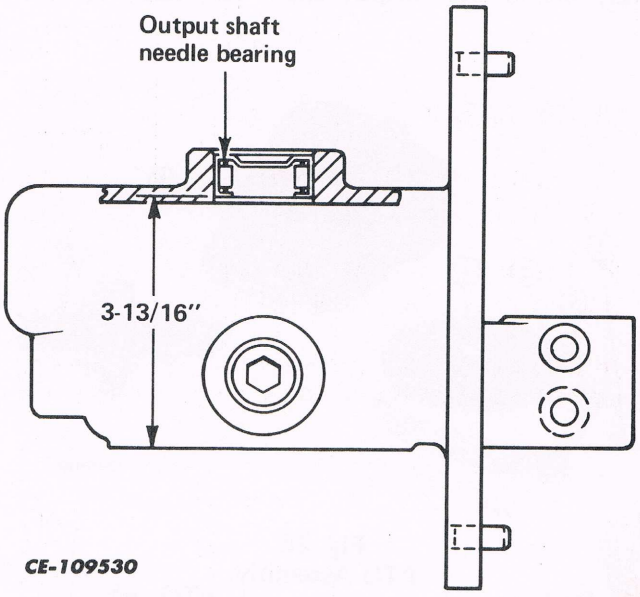

Fig. 24
Needle Bearing Clearance.

2. Press a new oil seal in the output shaft bearing flange. Be sure the lip faces inward (toward the bearing when the bearing flange is installed).

3. If the idler gear needle bearing is to be replaced, press a new bearing in place to the dimension shown.

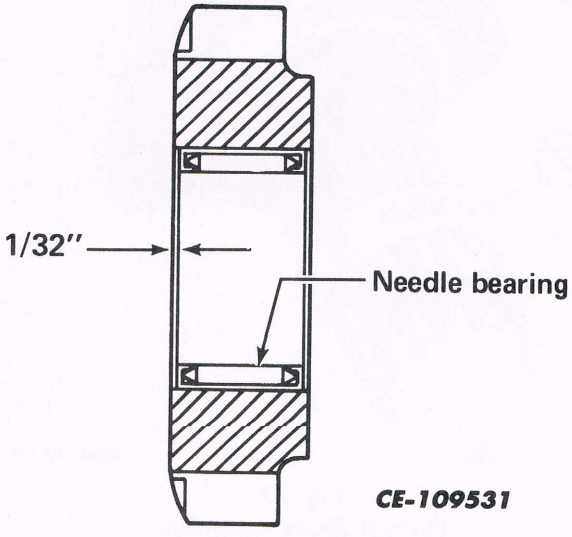

Fig. 25
Needle Bearing Replacement.

REASSEMBLY

1. Install PTO gear (4) with fork (3) in the housing. Coat the fork blocks with petroleum jelly. See Fig. 27.

2. With a new "O" ring on the selector fork shaft (2), install the output shaft (6). See Fig. 27.

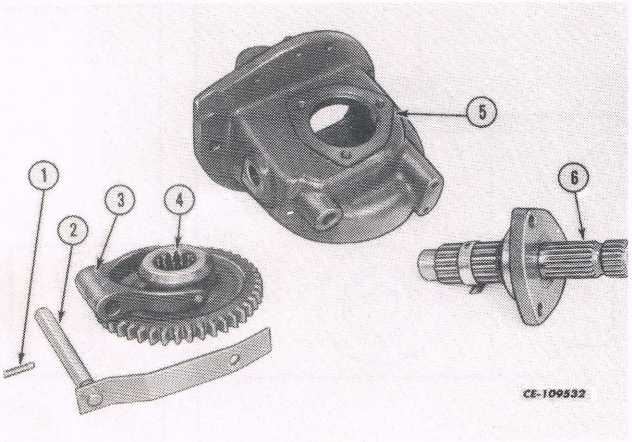

Fig. 26
PTO Assembly.

1. Roll pin
2. Selector fork shaft
3. Selector fork
4. PTO gear
5. Housing
6. Output shaft

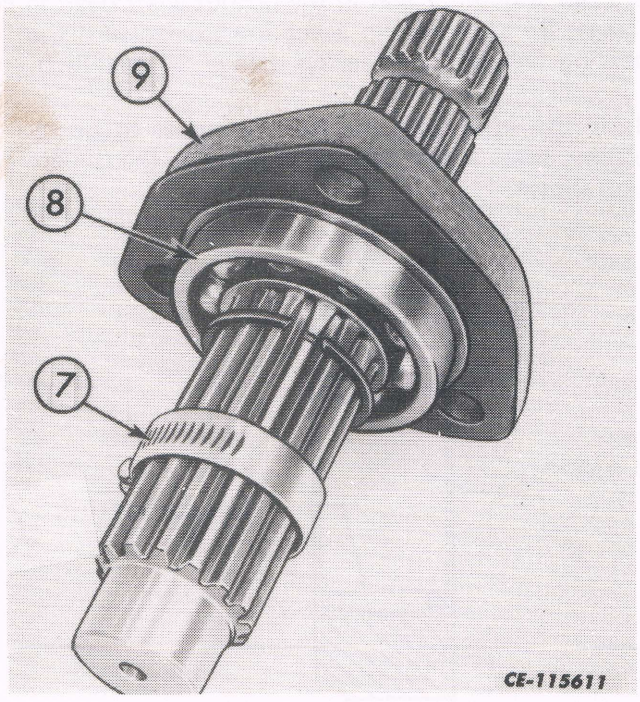

Fig. 27
Output Shaft Assembly.

7. Hose clamp
8. Bearing
9. Bearing retainer flange

3. Install the spring and two detent balls in the output shaft. Hold the balls in position with a hose clamp (7) as shown. See Fig. 28.

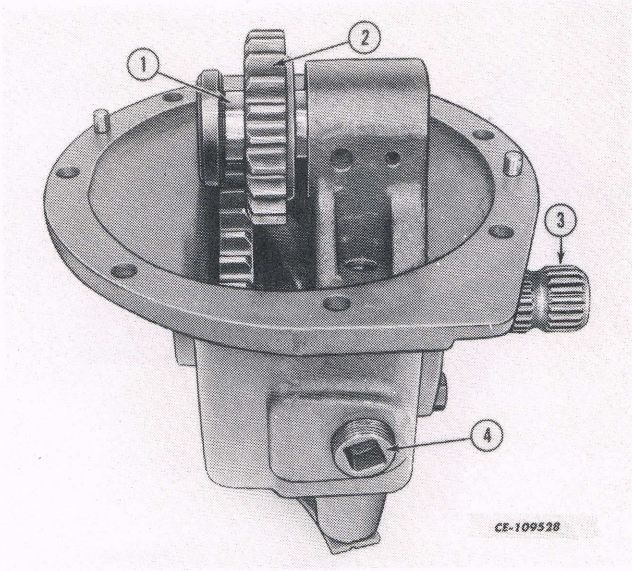

Fig. 28
Idler Gear and PTO Housing.

1. Idler gear shaft
2. Idler gear
3. Output shaft assembly
4. Pipe plug.

4. Hold the PTO gear in position and install the output shaft assembly (3). See Fig. 29. Remove the hose clamp (2). See Fig. 28.

5. Install the bearing retainer flange cap screws.

6. Install the roll pin (1) in the selector fork shaft (2). See Fig. 27. Install the pipe plug (4) in the housing. See Fig. 29.

7. Install the idler gear (2) and shaft (1) with the shoulder of the gear towards the idler gear support. Install the roll pin.

CONTENTS

FOUR PORT STEERING VALVE
(Refer to the Hydraulic Schematics in Back of the Section)

The basic hydraulic system provides hydraulic power to the power steering system at all operating speeds and furnishes hydraulic flow for the hitch and remote cylinders through auxiliary valves. The transmission housing and rear frame serve as the hydraulic reservoir. Refer to foldout No. 1 M.C.V. circuit.

The 60 lpm (15.8 gpm) pump draws a part of its supply from the return tubes and remainder from the rear frame through a full-flow filter which protects the hydraulic system from foreign matter. Should filter resistance become excessive, through clogging or because of cold fluid, a large by-pass valve at the outside end of the filter admits fluid, through a screen directly to the pump.

The filter and hydraulic pump are an integral part of the MCV. The filter and relief valve screen are serviced by removing the cover. The hydraulic pump is attached to the inner cover plate of the MCV. The pump is driven by the PTO assembly drive gear.

Fluid passes from the pump to a priority type flow divider valve which supplies a controlled flow of approximately 11 lpm (3 gpm) to the power steering system, irrespective of the pressure requirements. The power steering safety valve assembly is in this circuit in the MCV.

The power steering system is a hydrostatic type, linked by fluid, with no mechanical connection between the steering wheel and front axle.

The return flow from the power steering is returned to the MCV and is controlled at a lower pressure by the IPTO regulating valve.

When the IPTO is engaged, the fluid flows to the PTO clutch assembly with the excess fluid spilling over the clutch regulator valve and returning to the oil cooler.

In the disengaged position, the power steering flow returns to the oil cooler. The oil cooler is protected by a by-pass valve which allows the oil flow to by-pass the oil cooler under low oil temperature conditions.

In the MCV power steering port, a sump check valve is incorporated. The purpose of the sump check valve is to be able to fill up the manual steering circuit by sucking in fluid from the reservoir in case of a "dead" engine. Theoretically, this should not be necessary.

The 34 litres/min (9 gpm) flow to the hitch and auxiliary valves from the MCV is controlled by a system relief valve that is also incorporated in the MCV. Fluid from the hitch and auxiliary valves is ported back through the MCV assembly.

FIVE PORT STEERING VALVE
(Refer to the Hydraulic Schematics in Back of the Section)

The basic hydraulic system provides hydraulic power to the power steering system at all operating speeds, and furnishes a hydraulic flow for the hitch and remote cylinders through the auxiliary valves. The transmission housing and rear frame serve as the hydraulic reservoir. Refer to foldout No. 2 M.C.V. circuit.

The 64 or 70 lpm (17 or 18.5 gpm) pump draws a part of its supply from the return tubes and remainder from the rear frame through a full-flow filter which protects the hydraulic system from foreign matter. Should filter resistance become excessive, through clogging or because of cold fluid, a large by-pass valve at the outside end of the filter admits fluid, through a screen directly to the pump.

The filter and hydraulic pump are an integral part of the MCV. The filter and relief valve screen are serviced by removing the cover. The hydraulic pump is attached to the inner cover plate of the MCV. The pump is driven by the PTO assembly drive gear.

Fluid passes from the pump to a priority type flow divider valve which supplies a controlled flow of approximately 11 lpm (3 gpm) per minute to the power steering system, irrespective of the pressure requirements. The power steering safety valve assembly is in this circuit in the MCV.

The power steering system is a hydrostatic type, linked by fluid, with no mechanical connection between the steering wheel and front axle.

When the power steering is on demand, the return flow from the power steering is returned to the MCV and is controlled at a lower pressure by the IPTO regulating valve. When the steering valve is in the neutral position, the fluid flows power beyond to the loader valve bank. Return fluid from the valve bank flows through the flow divider which diverts the fluid to the oil cooler and the inlet of the power steering return. The fluid flows through internal ports in the MCV to the IPTO control valve and clutch pack which is regulated by the IPTO pressure regulating valve. The excessive fluid not being used by IPTO unit is returned through internal parts to the reservoir.

In the MCV power steering port, a sump check valve is incorporated. The purpose of the sump check valve is to be able to fill up the manual steering circuit by sucking in fluid from the reservoir in case of a "dead" engine. Theoretically, this should not be necessary.

The 53 LPM (14.5 gpm) flow to hitch and auxiliary valves from the MCV is controlled by a system relief valve that is also incorporated in the MCV. When the hitch and auxiliary valves are in the neutral position, the fluid flows power beyond to supply the loader valve bank.

HITCH NEUTRAL CIRCUIT
(Refer to Foldouts Nos. 4 and 5)

Fluid from the reservoir passes through a filter on the suction side of the pump. The fluid passes through a priority flow divider which diverts the flow to the power steering valve and the hitch. Fluid under pressure from the pump is exposed to the system relief valve. This valve is set at 17236 kPa (2500 psi). The pressure fluid flows to the variable raise rate and unloading valve circuit. A small amount of this fluid flows past the check valve in the unloading valve housing, past the pilot land of the main control valve spool, which is narrower than its port so that it can *never* completely cover it. This small amount of flow pushes against the unloading valve piston. The pressure against the unloading valve piston forces it against the unloading spool valve which opens and allows fluid to return to the steering or to the loader valve bank on units equipped with five port steering. The pressure fluid is exposed, through external lines to the variable raise rate valve and the unloading and flow control valve.

Power Steering Circuit w/IPTO on Demand (Four Port Steering)

Fluid from the pump flows through the flow divider to the power steering unit being controlled by the power steering system relief valve in the MCV.

The return fluid from the steering unit flows through internal ports in the MCV to the IPTO control valve and clutch pack which is regulated by the IPTO pressure regulating valve.

The excess fluid not being used by the IPTO unit is returned through internal ports to the oil cooler by-pass valve and to the oil cooler.

Power Steering Circuit w/IPTO on Demand (Five Port Steering)

The IPTO can be controlled by return flow pressure from the power steering valve when the steering valve is on demand. When the steering valve is in the neutral position, the fluid flows power beyond to the loader valve bank. Return fluid from the valve bank flows through the flow divider which diverts the fluid to the oil cooler and the inlet of the power steering return. The fluid flows through internal ports in the MCV to the IPTO control valve and clutch pack which is regulated by the IPTO pressure regulating valve.

The excess fluid not being used by the IPTO unit is returned through internal ports to the reservoir.

HITCH RAISING CIRCUIT
(Refer to Foldout Nos. 6 and 7)

When the position control handle is placed in the raise position of the quadrant, the control valve spool is pulled to the rear, against the pressure of the control valve spool return spring. The flow to the unloading valve, past the pilot lands of the spool, is closed off which allows the unloading valve spring to re-seat the spool valve. (Trapped fluid bleeds through the orifice in the unloading valve piston.)

The pressure of the fluid from the pump pushes the drop check valve off its seat, then works against the lift cylinder piston, which in turn, raises the rockshaft arms and lifting links.

As the rockshaft turns, the position control follow-up linkage turns on its pivot. The walking beam moves to allow the control valve spool return spring to move the spool back to the neutral position. When this happens, the circuit returns to neutral.

The purpose of the safety switch is to prevent the rockshaft from lifting too high. As the cylinder piston reaches the end of its stroke, it contacts one end of the safety switch. the other end of the switch is in contact with the trigger which is in contact with the control valve spool. As the cylinder piston moves farther outward, the safety switch forces the trigger forward allowing the main control valve spool to return to neutral.

Power Steering Circuit w/IPTO on Demand (Four-Port Valve)

Fluid from the pump flows through the flow divider to the power steering unit being controlled by the power steering system relief valve in the MCV.

The return fluid from the steering unit flows through internal ports in the MCV to the IPTO control valve and clutch pack which is regulated by the IPTO pressure regulating valve.

The excess fluid not being used by the IPTO unit is returned through internal ports to the oil cooler by-pass valve and to the oil cooler.

Power Steering Circuit w/IPTO on Demand (Five-Port Steering)

The IPTO can be controlled by return flow pressure from the power steering valve when the steering valve is on demand. When the steering valve is in the neutral position, the fluid flows power beyond to the loader valve bank. Return fluid from the valve bank flows through the flow divider which diverts the fluid to the oil cooler and the inlet of the power steering return. The fluid flows through internal ports in the MCV to the IPTO control valve and clutch pack which is regulated by the IPTO pressure regulating valve.

The excess fluid not being used by the IPTO unit is returned through internal ports to the reservoir.

HITCH LOWERING CIRCUIT
(Refer to Foldout Nos. 8 and 9)

When the position control handle is placed in the lower position (with the load control lever in the bottom 1/3 of the quadrant) the position control linkage allows the control valve return spring to push the control spool forward. The actuating rod pushes the check valve pilot ball off its seat. This allows the fluid behind the check valve to escape and causes an unbalance on the piston of the drop check valve between the fluid pressure from the cylinder on one side and the hydraulic and spring pressure on the other side. The valve also contacts the check ball seat to mechanically assist off-seating the drop poppet.

Fluid pressure from the cylinder can, therefore, push the drop check valve off its seat, allowing fluid to escape to the action control valve. The setting of the position control lever (in the action control section of the quadrant), will determine the rate at which the hitch will lower.

The fluid continues to escape until the follow-up linkage, being turned by the rockshaft actuating hub, pulls the spool back to the neutral position, allowing spring pressure to reseat the check valve and its pilot valve.

During the lowering operation, fluid from the pump is handled as though the system were in neutral.

GENERAL

Power Steering Circuit w/IPTO on Demand (Four-Port Steering)

Fluid from the pump flows through the flow divider to the power steering unit being controlled by the power steering system relief valve in the MCV.

The return fluid from the steering unit flows through internal ports in the MCV to the IPTO control valve and clutch pack which is regulated by the IPTO pressure regulating valve.

The excess fluid not being used by the IPTO unit is returned through internal ports to the oil cooler by-pass valve and to the oil cooler.

Power Steering Circuit w/IPTO on Demand (Five-Port Steering)

The IPTO can be controlled by return flow pressure from the power steering valve when the steering valve is on demand. When the steering valve is in the neutral position, the fluid flows power beyond to the loader valve bank. Return fluid from the valve bank flows through the flow divider which diverts the fluid to the oil cooler and the inlet of the power steering return. The fluid flows through internal ports in the MCV to the IPTO control valve and clutch pack which is regulated by the IPTO pressure regulating valve.

The excess fluid not being used by the IPTO unit is returned through internal ports to the reservoir.

MULTIPLE CONTROL VALVE (MCV)

REMOVAL

1. Drain the Hy-Tran from all compartments.

2. Be sure the entire area around the MCV assembly is thoroughly clean.

3. Remove the hydraulic oil filter with cover assembly (8, Fig. 1).

4. Disconnect the following lines at the MCV (See Fig. 1):

   a. Oil cooler. (1)

   b. Line from power steering. (2)

   c. Line to power steering. (3)

   d. Return line from hitch and auxiliary valves. (4)

   e. Line to hitch and auxiliary valves. (5)

   f. IPTO line (if equipped). (6)

5. Plug and cap all lines.

6. Disconnect the IPTO linkage if equipped.

7. Remove the capscrews securing the MCV assembly to the rear frame.

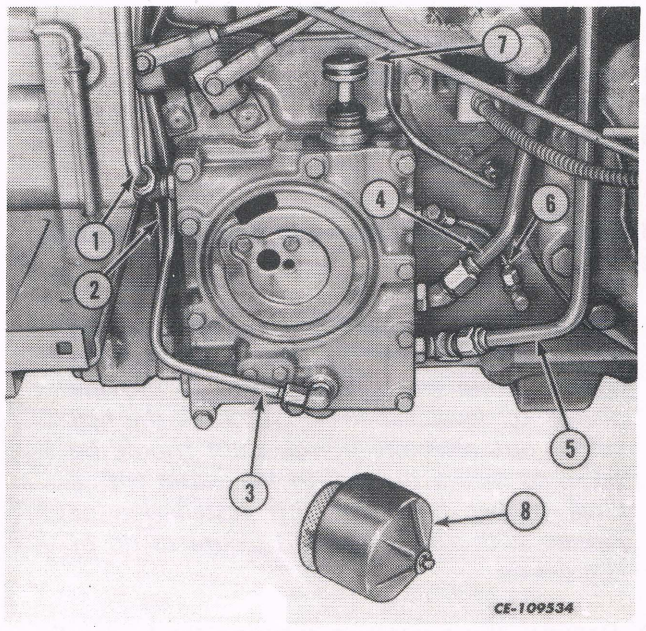

Fig. 1
MCV Valve, Filter and Connections.

1. Oil cooler line
2. Line from power steering
3. Line to power steering
4. Return line from hitch and auxiliary valves
5. Line to hitch and auxiliary valves
6. IPTO line (if equipped)
7. IPTO valve (if equipped)
8. Hydraulic oil filter with cover assembly

REMOVAL - Continued

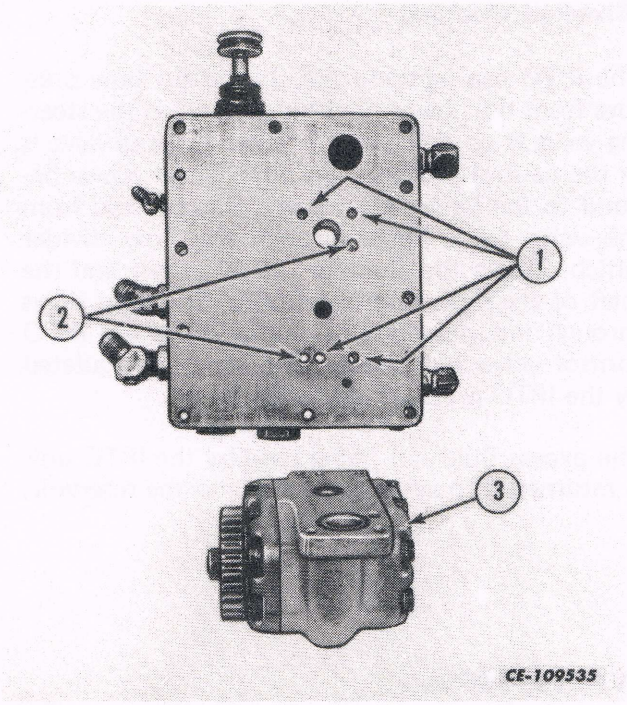

Fig. 2
Mounting Plate and Pump.

1. Pump mounting holes
2. Dowels
3. 60 LPM (15.8 gpm) pump

8. Remove the MCV assembly with the hydraulic pump.

NOTE: *Pump to rear frame rib seal must be positioned between rear frame rib and hydraulic pump when reassembled to provide proper oil level for IPTO clutch. If the seal comes out with the pump, steps should be taken to secure the seal to the pump with a large rubber band for this installation or replace with a new seal and secure to rib of rear frame.*

9. Remove the capscrews securing the hydraulic pump to the MCV assembly.

NOTE: *There are copper sealing washers under the pump mounting capscrews. If equipped with a 60 LPM (15.8 gpm) pump, the pump is on a spacer plate.*

DISASSEMBLY

1. Remove the components deemed necessary from the MCV assembly.

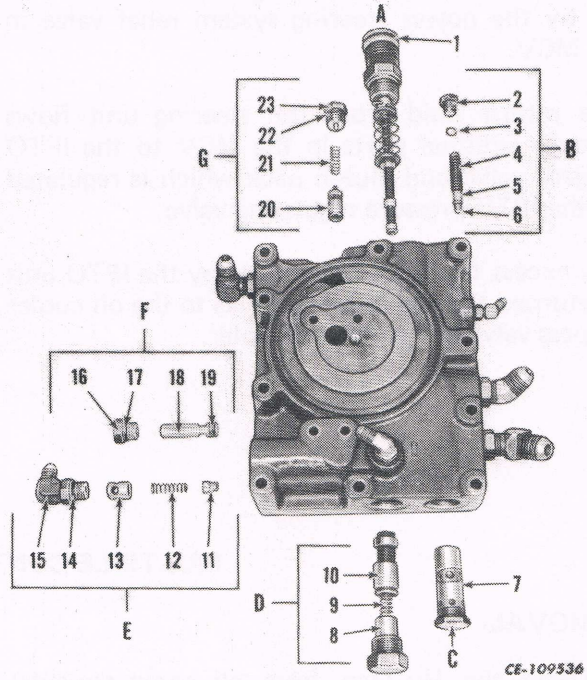

Fig. 3
MCV (Four-Port Steering Valve).

A. IPTO valve
B. IPTO pressure regulating valve
C. Pilot operated system relief valve (15857 - 17236 kPa (2300 - 2500 psi)
D. Flow divider
E. Power steering return with sump check valve
F. Power steering relief valve (10342 - 11032 kPa (1500 - 1600 psi)
G. Oil cooler by-pass valve

1. IPTO valve (for components, refer to Fig. 5)
2. Plug with "O" ring
3. Shim
4. Spring
5. IPTO pressure regulating valve pin
6. Poppet valve
7. Pilot operated system relief valve (15857 - 17236 kPa (2300 - 2500 psi) with "O" ring

8. Plug with "O" ring
9. Spring
10. Flow divider
11. Check valve
12. Spring
13. Spring retainer
14. "O" ring
15. Elbow (power steering return)
16. Plug
17. "O" ring
18. Power steering relief valve (10342 - 11032 kPa (1500 - 1600 psi)
19. "O" ring
20. Oil cooler by-pass valve
21. Spring
22. "O" ring
23. Plug

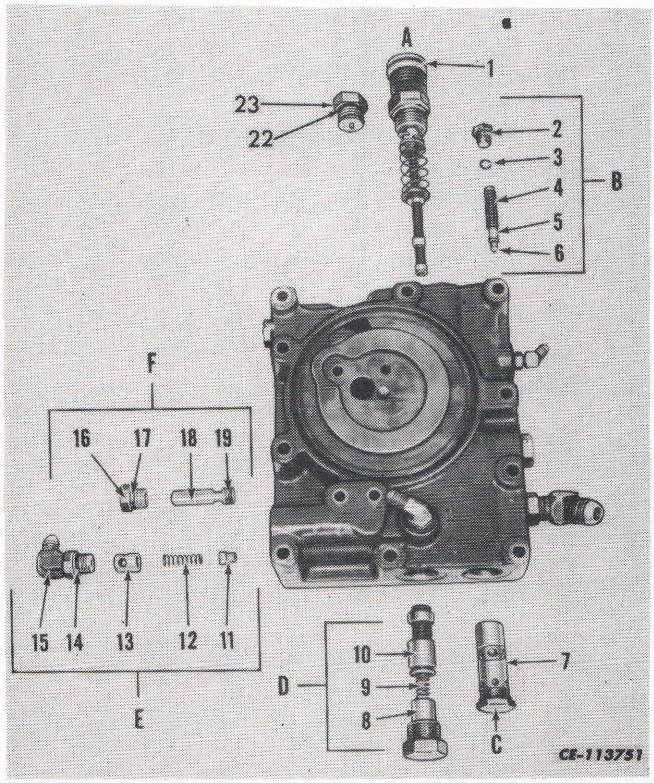

Fig. 4
MCV (Five-Port Steering Valve)

A. IPTO valve (if equipped).
B. IPTO pressure regulating valve (if equipped).
C. Pilot operated system relief valve (15857 - 17236 kPa (2300 - 2500 psi)
D. Flow divider
E. Power steering return w/sump check valve
F. Power steering relief valve (17236 kPa (2500 psi)

1. IPTO valve (for components, refer to Fig. 5)
2. Plug with "O" ring
3. Shim
4. Spring
5. IPTO pressure regulating valve pin
6. Poppet valve
7. Pilot operated system relief valve (15857 - 17236 kPa (2300 - 2500 psi) with "O" ring
8. Plug w/"O" ring
9. Spring
10. Flow divider
11. Check valve
12. Spring
13. Spring retainer
14. "O" ring
15. Elbow (power steering return)
16. Plug
17. "O" ring
18. Power steering relief valve 17236 kPa (2500 psi)
19. "O" ring
22. "O" ring
23. Plug

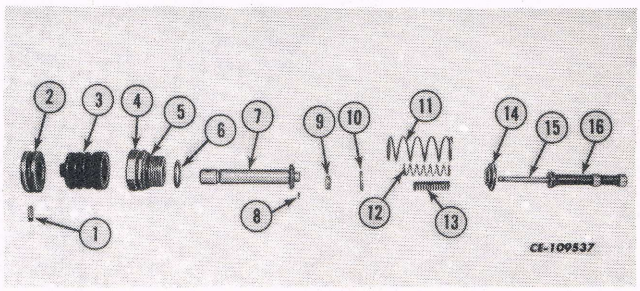

Fig. 5
IPTO Valve.

1. Pin
2. IPTO collar
3. Boot
4. Valve stem guide
5. "O" ring
6. Shim
7. Control valve stem
8. Pin
9. Retainer
10. Washer
11. Return spring
12. Control spring (light)
13. Control spring (heavy)
14. Retainer
15. Control valve guide pin
16. Control valve

2. Remove the pin (1) securing the valve stem to the IPTO collar (2). See Fig. 5.

3. Remove the pin (8) securing the control valve to the valve stem (7) and remove the springs (11, 12 and 13), retainers (9 and 14) and washer (10). See Fig. 5.

INSPECTION AND REPAIR

1. Clean all parts thoroughly with solvent.

2. Discard all "O" rings.

3. Check all parts for wear or scoring and replace if necessary.

4. Flush out all passages in the MCV assembly with Hy-Tran.

REASSEMBLY AND INSTALLATION

IMPORTANT: When installing the pump, the foam rubber rib seal must be positioned between the rear frame rib and the pump to provide the proper fluid level for the IPTO clutch.

1. Coat all parts with Hy-Tran and reassemble.

NOTE: *There is only one thickness of gasket available for installing the MCV to the rear frame. (Two thicknesses were originally available.)*

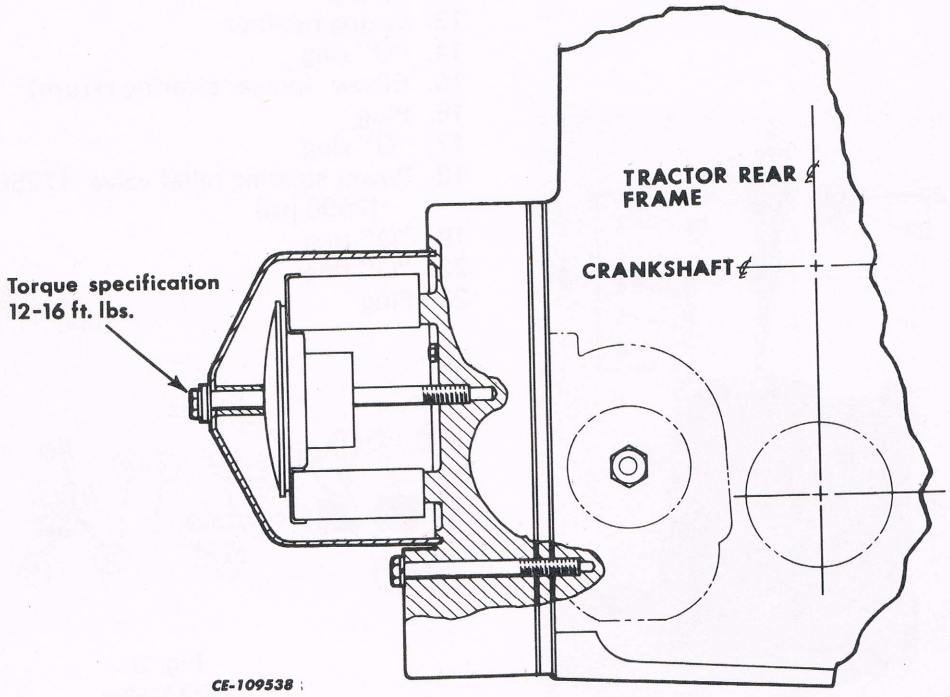

Fig. 6
MCV Filter.

LOAD AND POSITION CONTROL HITCH

REMOVAL AND DISASSEMBLY

1. Position the rockshaft in the lowest position.

IMPORTANT: If the unloading and flow control valve is the only unit to be serviced, it can be removed after performing steps 2 and 3. For disassembly, refer to step 11.

2. Remove the seat.

3. Remove the variable valve to flow control tube assembly. (The illustration shows the tube already removed.)

4. Remove the fuel tank and fenders. Refer to the proper section.

5. Remove the variable flow control supply tube assembly, the draft control pressure tube assembly from the MCV and the unloading and flow control valve assembly.

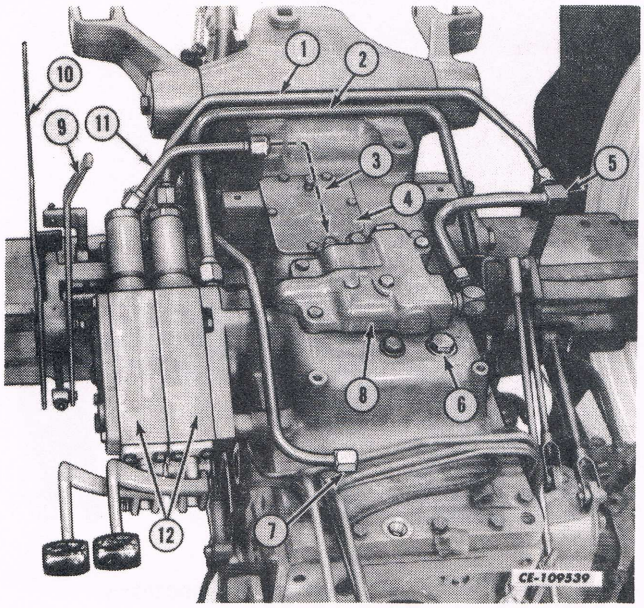

Fig. 7
Typical Illustration.

1. Variable flow control supply tubing
2. Auxiliary return line
3. Location of variable valve to flow control tube
4. Inspection plate
5. Draft control pressure tube assembly
6. Hitch cylinder relief valve plug
7. Oil cooler return
8. Unloading and flow control valve assembly
9. Positioning control lever
10. Draft control lever
11. Variable valve to flow control tube
12. Auxiliary valves

6. Remove the auxiliary return tube assembly.

7. Remove the inspection plate.

8. Remove the oil cooler return tube assembly to the rear frame.

9. Remove the hitch cylinder relief valve plug and the relief valve.

10. Make a filler plate 102 mm (4 inches) wide, 381 mm (15 inches) long by 6.4 mm (1/4 inch) thick. Attach the filler plate to the hydraulic housing adapter bracket FES 52-6. Attach the bracket to adapter plate FES 52-1 and mount to engine stand PLT-540. Remove the hitch housing assembly and mount it to the engine stand.

11. Remove the unloading and flow control valve assembly (8, Fig. 7) from the hitch housing. Disassemble the unit as follows (See Fig. 9):

a. Remove the unloading valve plug (6).

b. Pull the unloading valve piston assembly (5) out.

c. Using a tie rod socket wrench, remove the unloading valve body assembly (4) with spring (3).

d. Remove the check valve plug (10), spring (12) and check poppet valve (14).

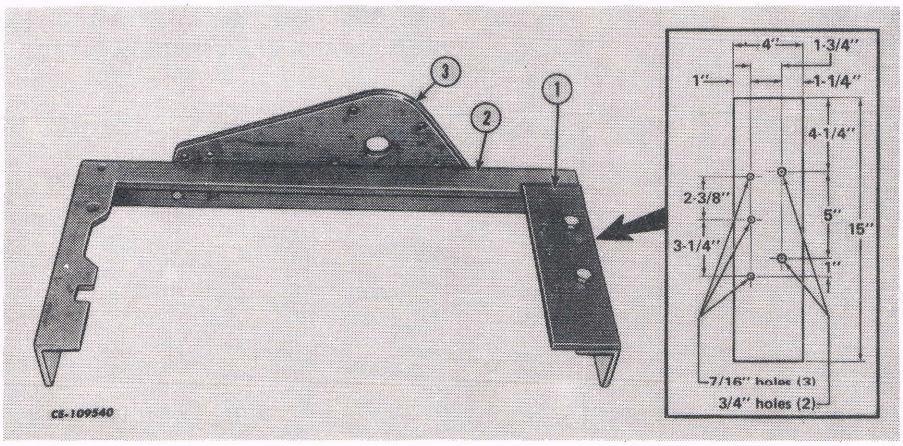

Fig. 8
Attaching the Filler Plate.
1. Filler plate 2. FES 52-6 3. FES 52-1

REMOVAL AND DISASSEMBLY - Continued

e. Remove the flow control fitting (8), spring (11) and unloading and flow control valve (13).

f. Remove the retaining shaft (2) with "O" ring (1), used for positioning the unloading and flow control valve.

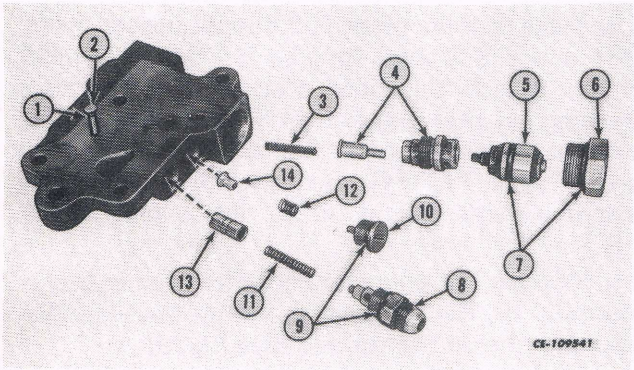

Fig. 9
Unloading and Flow Control Valve.

1. "O" ring
2. Retaining shaft
3. Unloading valve body spring
4. Unloading valve body assembly
5. Unloading valve piston assembly
6. Plug
7. "O" rings
8. Flow control fitting
9. "O" rings
10. Check valve plug
11. Spring
12. Spring
13. Unloading and flow control valve (Not serviced separately)
14. Check poppet valve

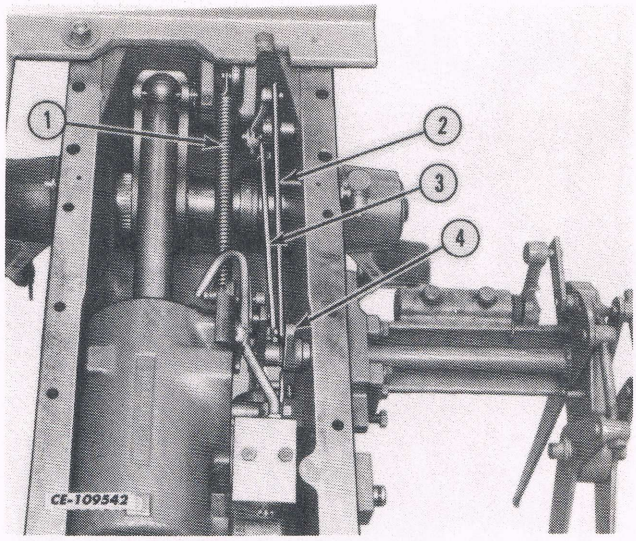

Fig. 10
Draft Control Cylinder Connections.

1. Sensing beam spring and bar
2. Positioning link
3. Walking beam
4. Slow motion actuating lever assembly

12. Rotate the engine stand so it is positioned with the housing upside down.

13. Remove the positioning link (2) from the slow motion actuating lever assembly (4). See Fig. 10.

14. Remove the walking beam (3) to valve link from the main valve actuator assembly. See Fig. 10.

15. Remove the sensing beam spring and bar (1, Fig. 10) from the eccentric plate assembly and draft control link assembly (1, Fig. 12).

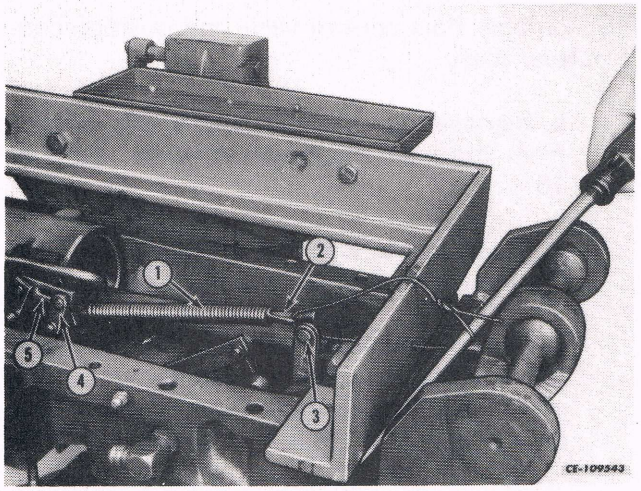

Fig. 11
Sensing Beam Spring.

1. Sensing beam spring
2. Sensing beam bar
3. Draft control link assembly
4. Positioning control eccentric assembly
5. Trigger to quadrant link

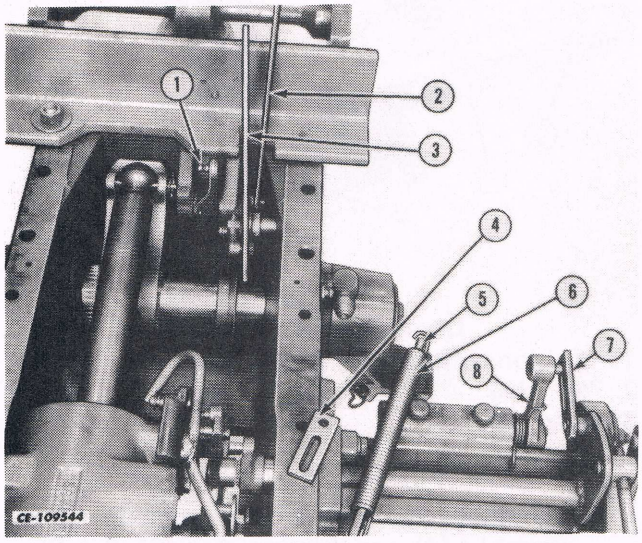

Fig. 12
Draft Control Cylinder Connections.

1. Draft control link assembly
2. Positioning link
3. Walking beam
4. Trigger to quadrant link
5. Sensing beam bar
6. Sensing beam spring
7. Snap ring
8. Flow control arm

16. Remove the trigger to quadrant link (4). (Note that the slot is to the rear in this position.) See Fig. 12.

17. Remove the three 1/2"-13 hex-head capscrews with sealing washers that secure the cylinder and valve assembly to the hitch housing and remove the assembly.

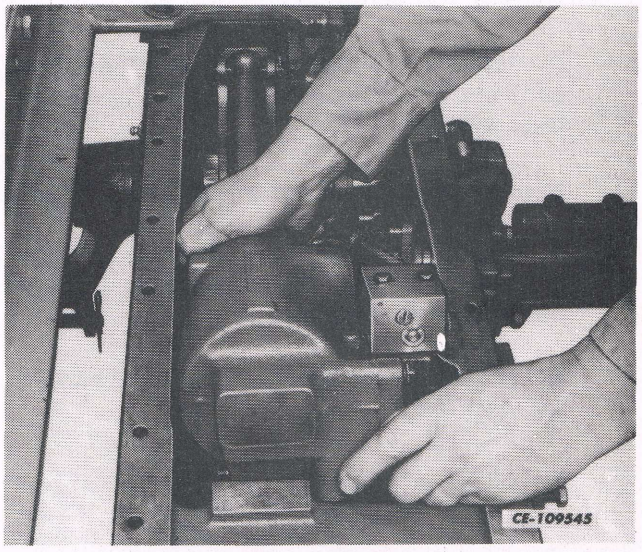

Fig. 13
Removing Cylinder.

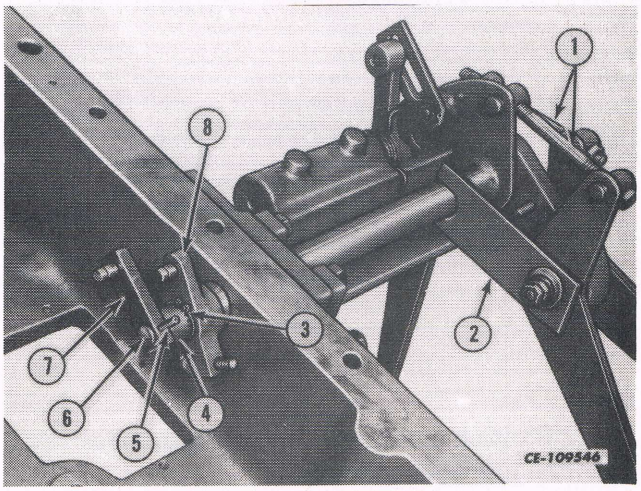

Fig. 14
Control and Actuating Lever Assemblies

1. Connecting rods
2. Inner retaining plate
3. Snap ring
4. Load control shaft spacer
5. Roll pin
6. Load control shaft assembly
7. Draft sensitivity control lever assembly
8. Slow motion actuating lever assembly

REMOVAL AND DISASSEMBLY - Continued

18. Remove the variable flow valve assembly with position and draft control shaft as follows (See Fig. 14):

a. Remove the inner retaining plate (2) and outer retaining plate from the control levers. Remove the Belleville washers.

b. Remove the roll pin (5) from the load control shaft (6) and draft sensitivity control lever assemblies (7).

c. Remove the load control shaft spacer (4).

d. Remove the snap ring (3) from the slow motion actuating lever assembly (8) and positioning control lever.

NOTE: *There are timing marks on the spline for installation.*

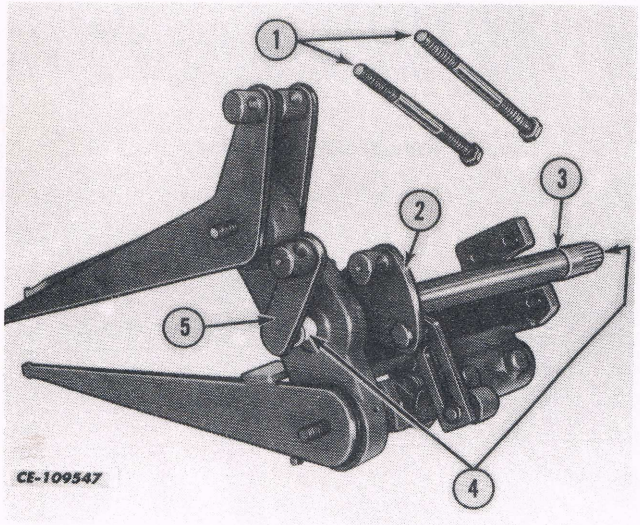

Fig. 15
Position and Load Control Assemblies

1. Hitch link connecting rods
2. Position control lever shaft assembly
3. "O" ring
4. Bearings
5. Load control shaft assembly

19. Variable flow control valve and position control lever shaft:

a. Remove the hitch link connecting rods (1) from the load and position levers. See Fig. 15.

b. Remove the load control shaft (5) with the control lever shaft bearings. See Fig. 15.

c. Remove the snap ring from the flow control arm assembly and remove the three capscrews holding the hitch control shaft support assembly to the hitch housing.

d. Remove the position control shaft (1) from the support assembly with the bearing and "O" ring (3). See Fig. 16.

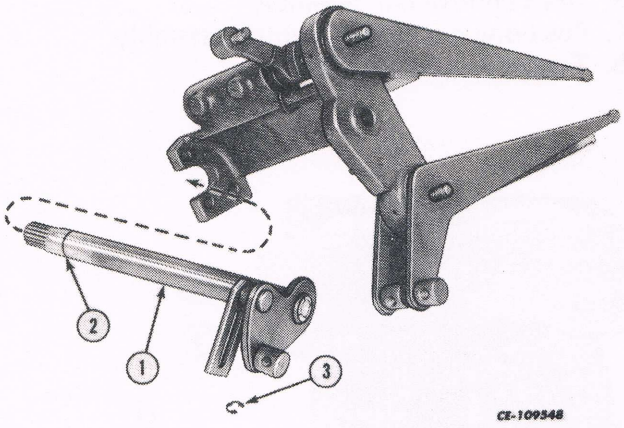

Fig. 16
Control Lever Assembly.

1. Position control lever shaft
2. "O" ring
3. Snap ring

e. Remove the flow control adjusting lever assembly (4) and friction disc (9). See Fig. 17.

f. Remove the roll pin and pivot bolt (10) from the support assembly (11). See Fig. 17.

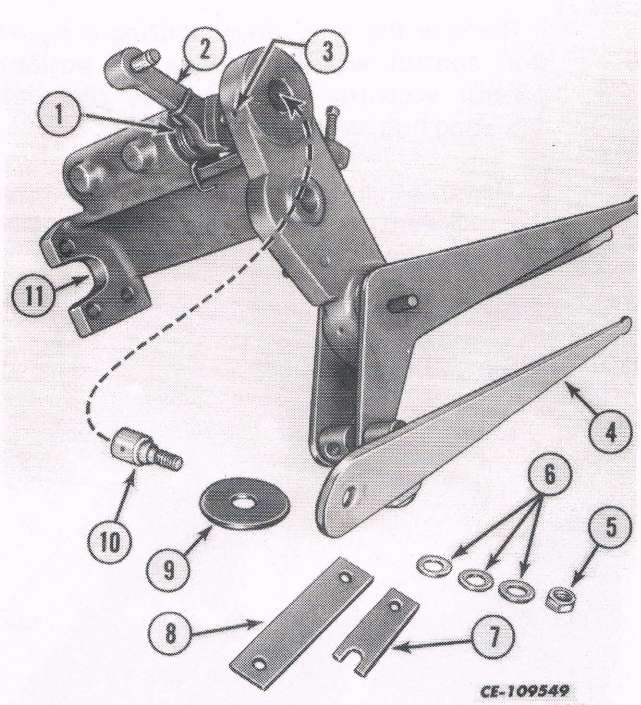

Fig. 17
Flow Control Lever Assembly.

1. Return spring
2. Flow control arm assembly
3. Roll pin hole
4. Flow control adjusting lever assembly
5. Nut
6. Belleville washers
7. Inner retaining plate
8. Outer retaining plate
9. Friction disc
10. Pivot bolt
11. Support assembly

g. Remove the allen set screw (1) securing the flow control arm assembly (3) to the spool (4) with return spring (2). See Fig. 18.

h. Remove the variable flow control valve plug (1, Fig. 19) with "O" ring from the spool (3, Fig. 20). Remove the spool with "O" rings and back-up washers (2, Fig. 20).

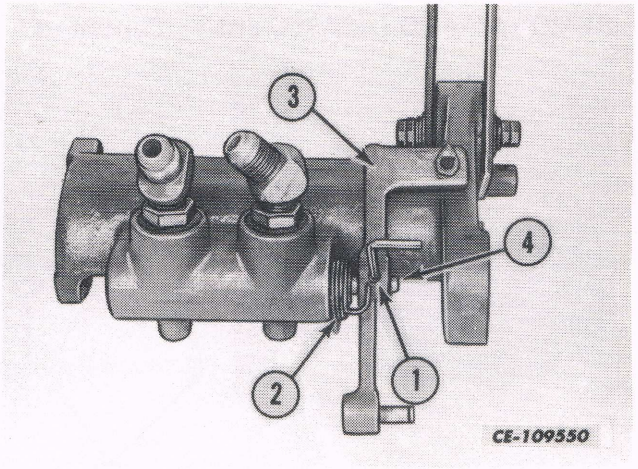

Fig. 18
Flow Control Arm Assembly.

1. Allen set screw
2. Return spring
3. Flow control arm assembly
4. Spool

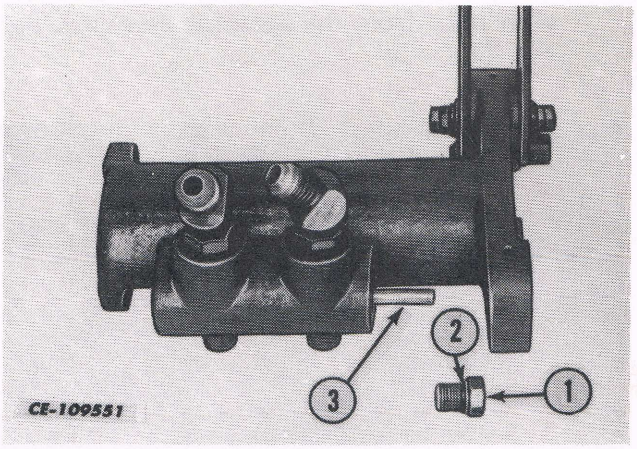

Fig. 19
Valve Plug and Spool.

1. Variable flow valve plug
2. "O" ring
3. Spool

REMOVAL AND DISASSEMBLY - Continued

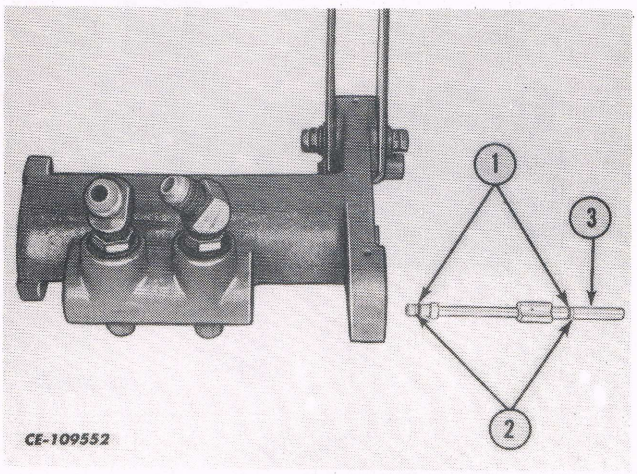

Fig. 20
Valve Spool.

1. "O" rings 2. Back-up washers 3. Spool

i. Remove the snap ring securing the follow up walking beam lever assembly (3) to the position control eccentric assembly (2). Remove the follow up walking beam assembly with links from the eccentric assembly. See Fig. 21.

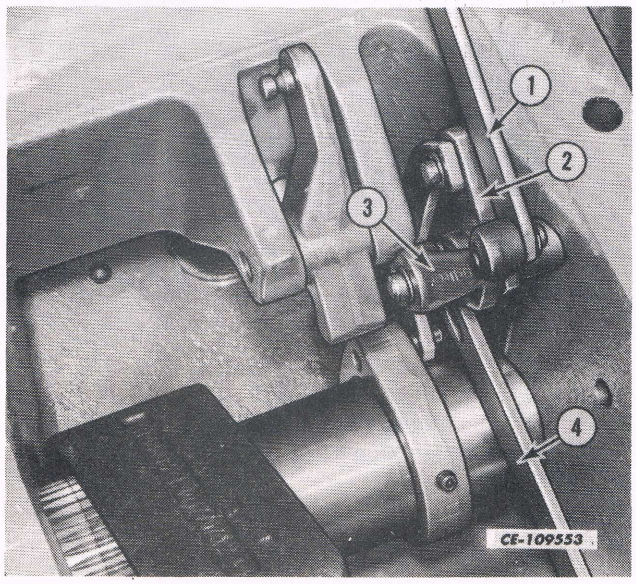

Fig. 21
Removing Walking Beam Lever Assembly.

1. Walking beam to valve link
2. Positioning control eccentric assembly
3. Follow-up walking beam lever assembly
4. Walking beam to quadrant link bar

j. Remove the snap rings securing the position control walking link to the position control eccentric assembly and rockshaft actuating hub assembly (4, Fig. 23).

k. Remove the right rockshaft arm and move the rockshaft to the left to permit removal of the position control walking link.

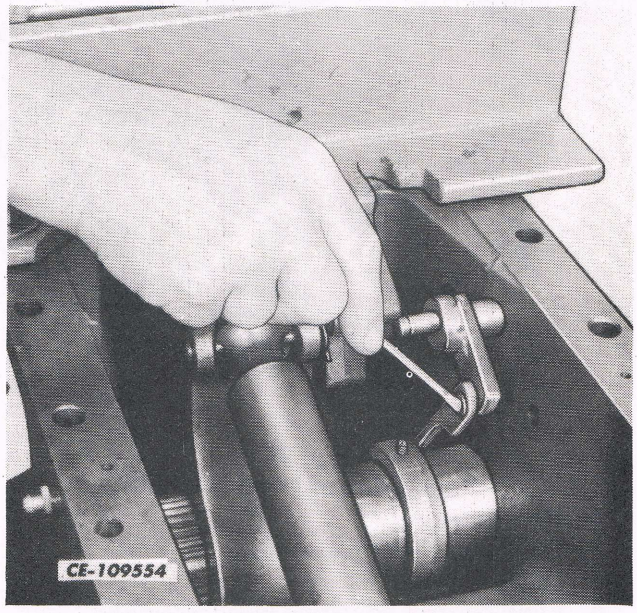

Fig. 22
Position Control Walking Link.

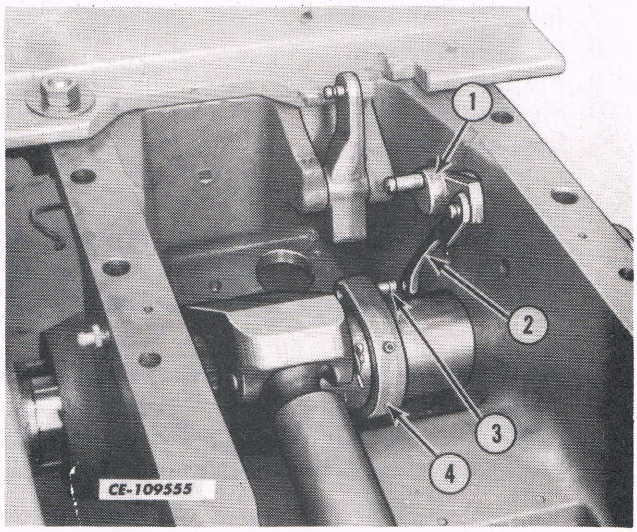

Fig. 23
Position Control and Rockshaft Assemblies.

1. Position control eccentric assembly
2. Position control walking link
3. Snap ring removed
4. Rockshaft actuating hub assembly

l. Remove the snap ring (1) on the outside of the position control eccentric assembly (3) and remove the assembly with "O" ring (2). See Fig. 24.

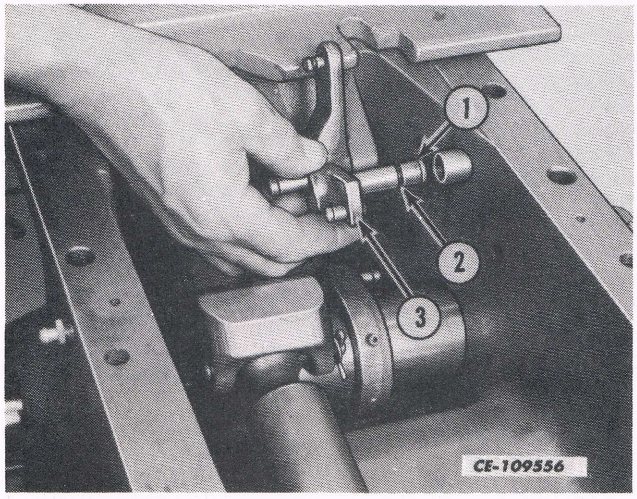

Fig. 24
Position Control Assembly.
1. Snap ring
2. "O" ring
3. Position control eccentric assembly

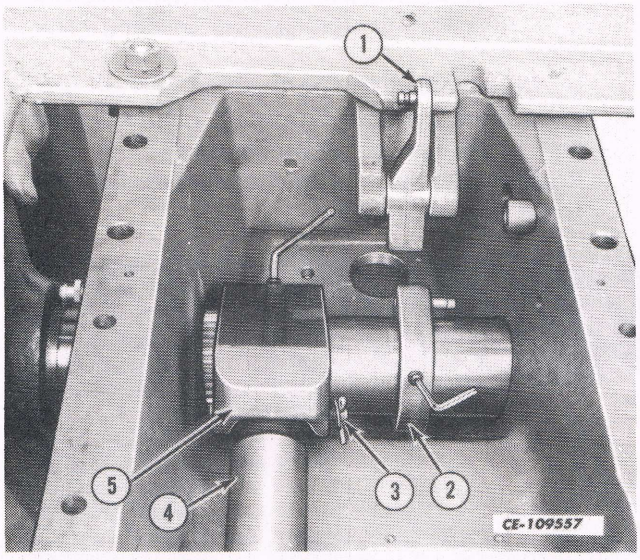

Fig. 25
Draft Control Link and Rockshaft Assemblies.
1. Draft control link assembly
2. Rockshaft actuating hub assembly
3. Pin
4. Hydraulic cylinder connecting rod
5. Rockshaft bellcrank lever

m. Remove the allen set screws in the rockshaft bellcrank and the rockshaft actuating hub assembly (2). Remove the rockshaft from the left side and remove the right rockshaft arm with shaft. Note the timing mark on the end of the shaft and arm for reassembly. The bellcrank and actuating hub assembly have master splines for locating on the rockshaft. See Fig. 25.

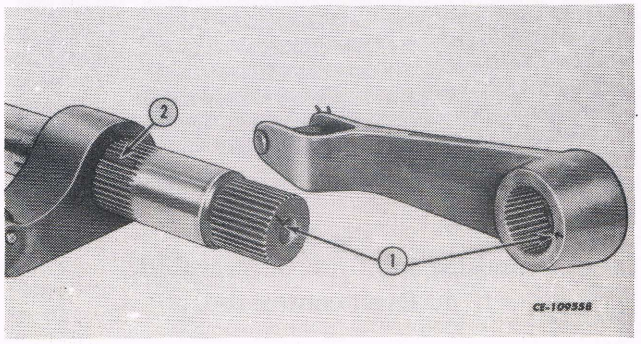

Fig. 26
Rockshaft and Arm.
1. Timing marks
2. Master splines

n. Remove the allen capscrews (1, Fig. 27) securing the draft sensing spring assembly to the housing. Remove the draft control rod (1, Fig. 28), bushings and oil seal. Remove the draft control link assembly (1, Fig. 30) if required.

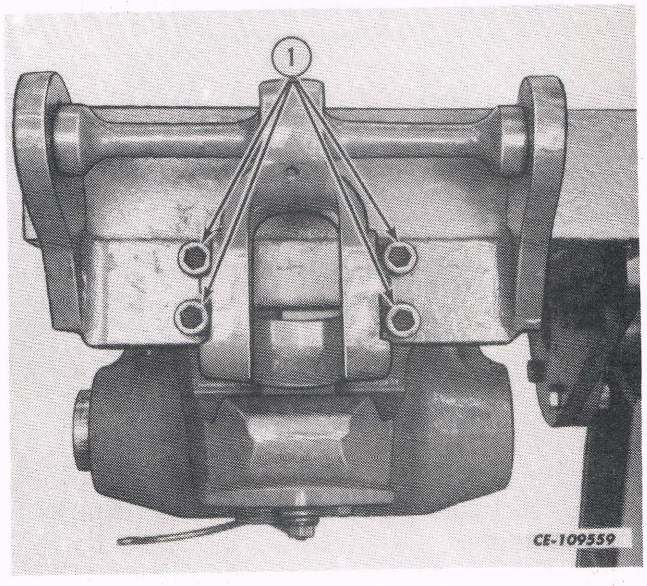

Fig. 27
Removing the Allen Capscrews.
1. Allen capscrew

REMOVAL AND DISASSEMBLY - Continued

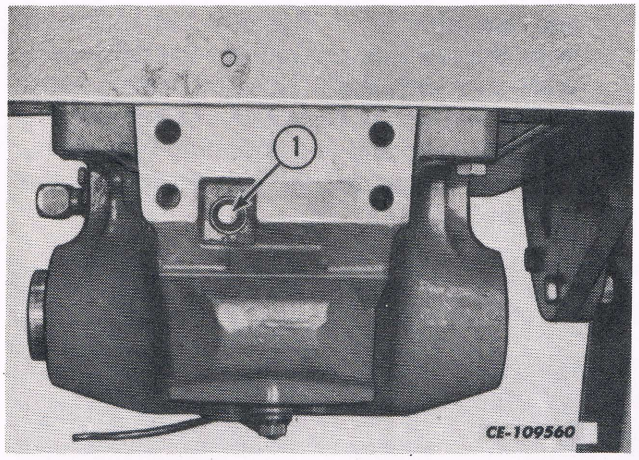

Fig. 28
Housing and Draft Control Rod.
1. Draft control rod

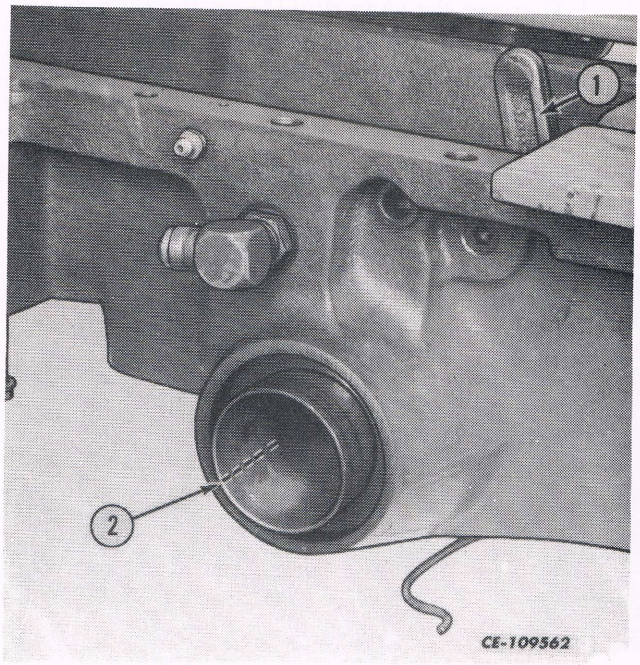

Fig. 30
Bushing Seam Location.
1. Draft control link 2. Bushing seam

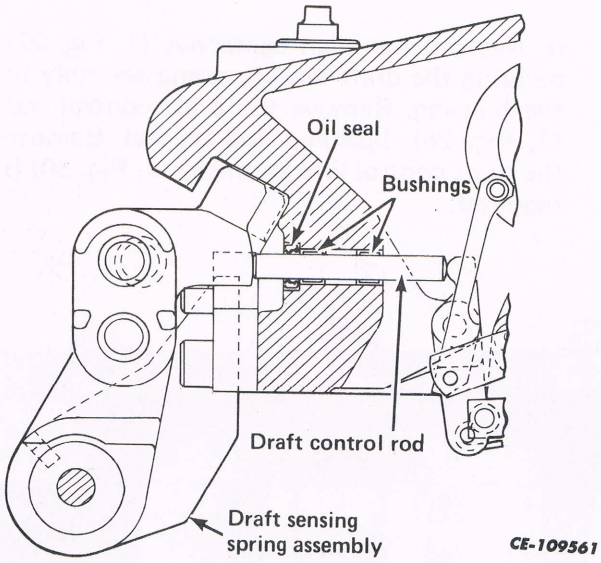

Fig. 29
Oil Seal and Bushings.

o. Rockshaft bushing and oil seal removal procedure:

1. Remove the oil seal by prying it out with a large screwdriver. Use caution not to damage the seal bore.

2. Drive the bushing out with a brass drift or collapse the bushing using caution not to damage the bushing bore.

p. When installing the bushing and oil seal, use a drive having a 32 mm (2-1/4 inch) pilot and a 76 mm (3 inch) driver (1, Fig. 31). Position the seam in the bushing as shown in the above illustration.

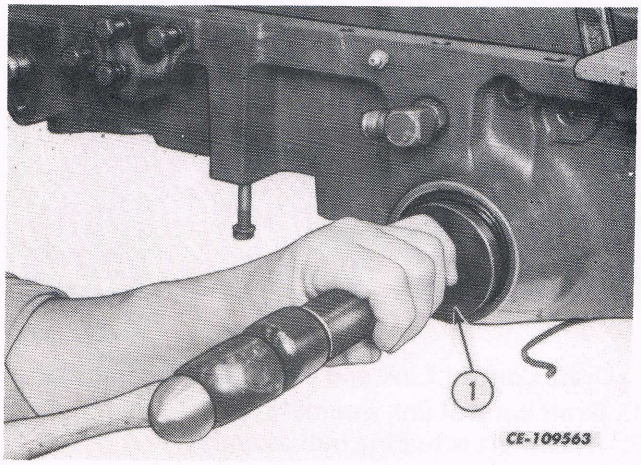

Fig. 31
Bushing and Oil Seal.
1. Driver (PLT-104-1)

REMOVAL AND DISASSEMBLY

1. Remove the action control valve assembly (1) from the draft control valve assembly with the cylinder lubricant tube assembly (2). See Fig. 32.

   a. Remove the variable orifice spool snap ring and spool with the spring. See Fig. 33.

   b. Remove the drop control spring retainer plug assembly. (This is staked to resist 2.7 N· m (2 ft-lbs) torque.) Remove the spring and drop control valve piston.

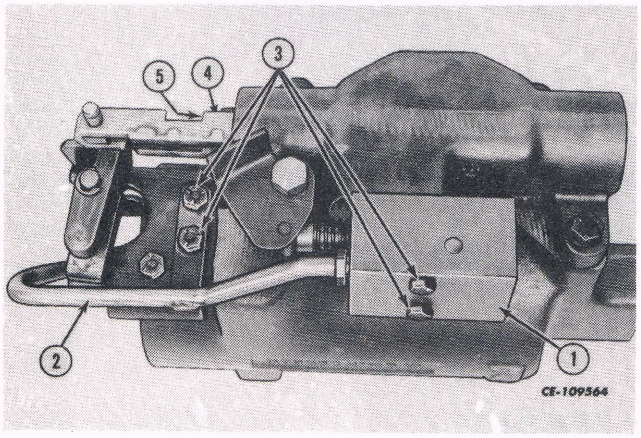

Fig. 32
Action Control Valve Assembly.

1. Action control valve assembly
2. Cylinder lubricant tube assembly
3. Capscrews (to be removed for removal of the action control valve assembly with lubricant tube)
4. Valve link
5. Adjusting screw

2. Remove the switch lever bracket assembly (1) with hydraulic switch lever (5) and the eccentric plate assembly (2) with draft control trigger lever assembly (3) from the draft control cylinder assembly. See Fig. 34.

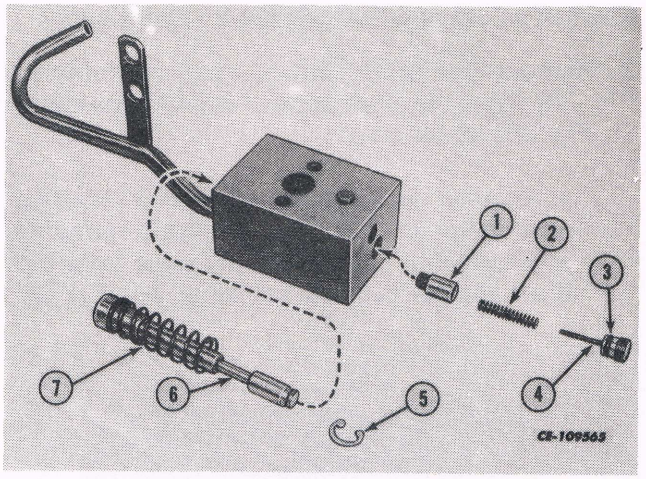

Fig. 33
Disassembly of Valve.

1. Piston
2. Spring
3. "O" ring
4. Drop control spring retainer
5. Snap ring
6. Spool
7. Spring

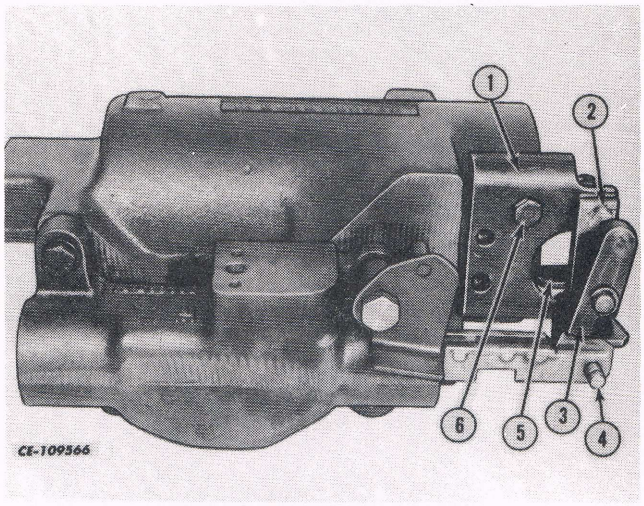

Fig. 34
Switch Lever Bracket Assembly.

1. Switch lever bracket assembly
2. Eccentric plate assembly
3. Draft control trigger lever assembly
4. Main valve actuator assembly
5. Hydraulic switch lever
6. Capscrew securing bracket to draft control cylinder

REMOVAL AND DISASSEMBLY - Continued

3. Remove the draft control valve assembly (2, Fig. 36) from the draft control cylinder assembly (1, Fig. 36), as follows:

a. Remove the three capscrews and retarding arm shoulder bolt (3) with draft retarding arm assembly (2) and sealing rings from the draft control cylinder assembly. See Fig. 35.

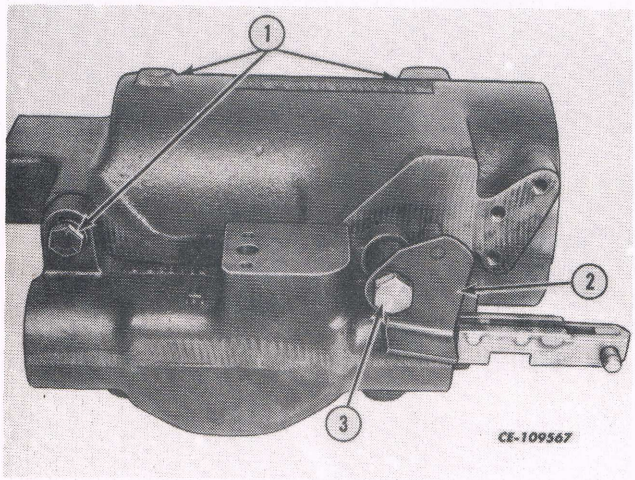

Fig. 35
Retarding Arm Assembly.
1. Capscrews (3)
2. Draft retarding arm assembly
3. Retarding arm shoulder

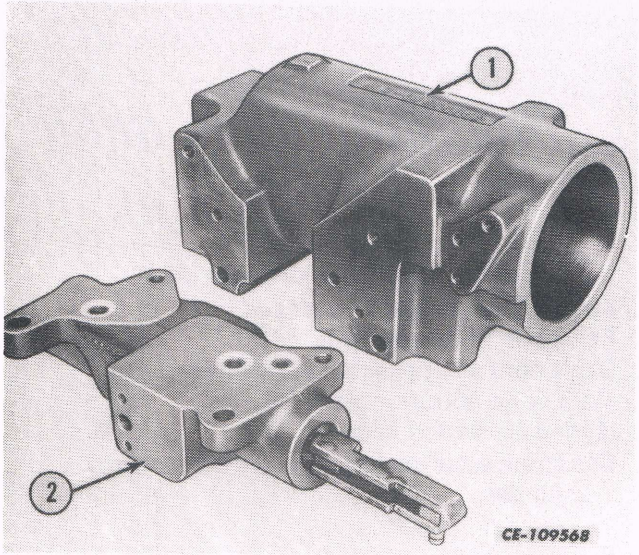

Fig. 36
Cylinder Housing and Draft Control Valve.
1. Draft control cylinder assembly
2. Draft control valve assembly

b. Remove the draft control valve assembly (2). See Fig. 36).

c. Remove the drop poppet snap ring (2) and retainer (4). Push down on the retainer with a screwdriver to free the snap ring and remove the spring (5), poppet (6), pilot spring (8), ball (9) and valve seat (11). See Fig. 37.

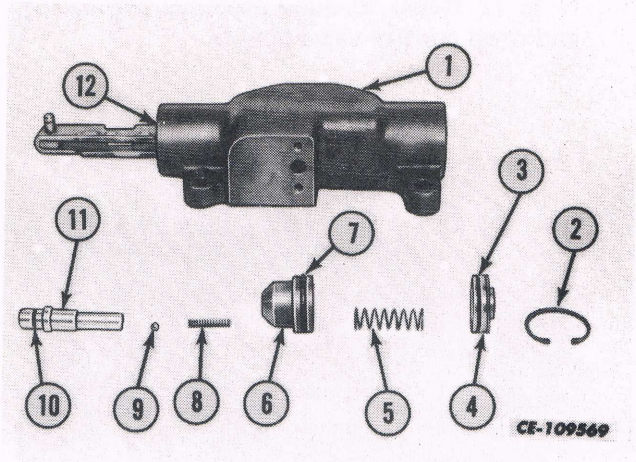

Fig. 37
Draft Control Valve.

1. Valve body	7. "O" ring
2. Snap ring	8. Pilot valve spring
3. "O" ring	9. Ball
4. Retainer	10. "O" ring
5. Drop poppet spring	11. Pilot valve seat
6. Drop poppet	12. Main control spool snap ring

d. Using a screwdriver, push down on the retainer under the valve link to free the main control spool snap ring and remove the snap ring (12). See Fig. 37.

e. Pull the spool assembly out of the valve body. Be careful not to drop or otherwise damage the actuating rod (9). See Fig. 38.

f. Loosen the locknut and compress the return spring (5) enough to slide a wrench on the flatted portion of the actuator tube. Count and record the number of threads and remove the valve link (4). See Fig. 39.

g. Remove the locknut.

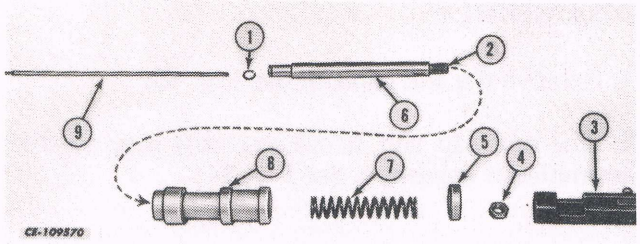

Fig. 38
Actuating Rod Assembly.

1. Snap ring
2. Actuating rod adjusting screw
3. Valve link
4. Lock nut
5. Retainer
6. Actuator tube
7. Return spring
8. Spool
9. Actuating rod

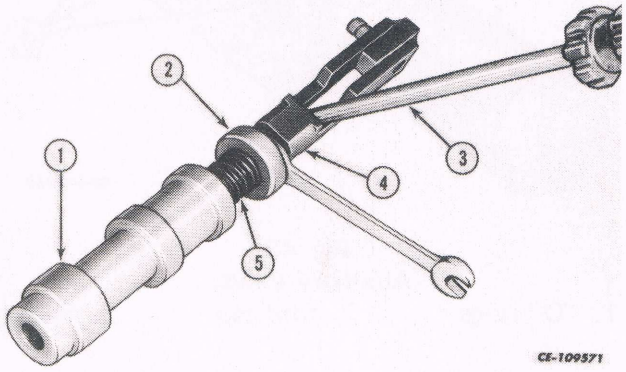

Fig. 39
Valve Spool Assembly.

1. Spool
2. Retainer
3. Screwdriver
4. Valve link
5. Return spring

h. Slide the actuator tube through the spool to expose the snap ring which holds it in the valve spool. Use two needle nose pliers and gently remove the snap ring so as not to damage it. See Fig. 40.

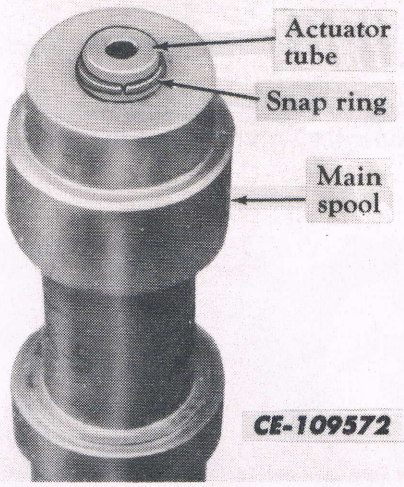

Fig. 40
Main Spool and Actuator Tube.

4. The piston (1) may be removed from the cylinder if necessary, by bouncing it against a wooden block. When the piston flange reaches the bottom of the cylinder, completely remove by gently tapping the cast surface. Be very careful not to allow the piston to drop. See Fig. 41.

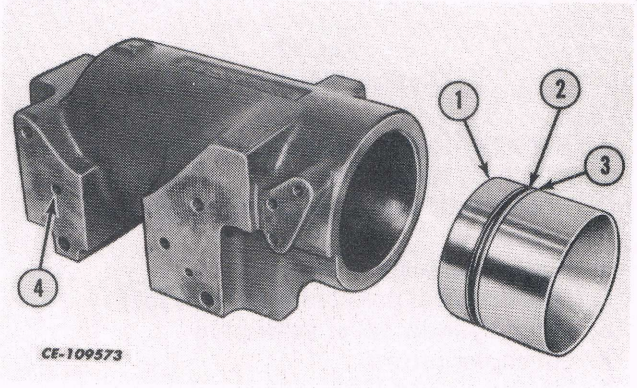

Fig. 41
Valve Housing and Piston.

1. Piston
2. "O" ring
3. Back-up washer
4. Supply port to cylinder

REMOVAL

1. Remove the side panel from the right console.

2. Disconnect the auxiliary valve handles and the hydraulic lines and remove the valves. (12, Fig.42)

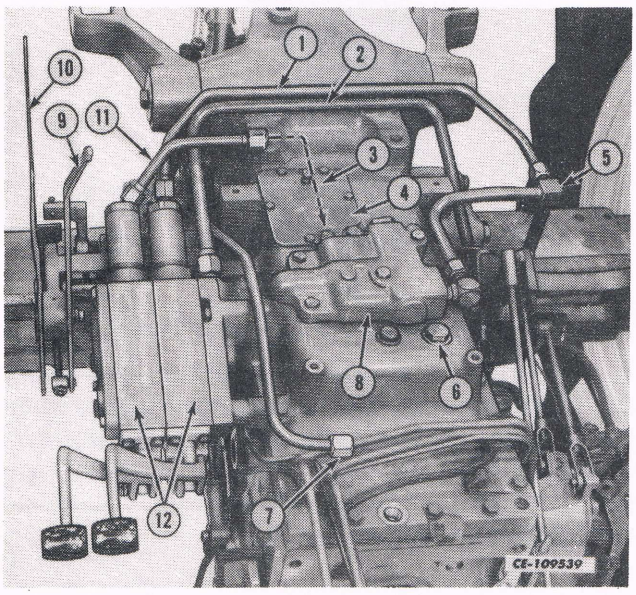

Fig. 42
(Typical Illustration).

1. Variable flow control supply tubing
2. Auxiliary return line
3. Location of variable valve to flow control tube
4. Inspection plate
5. Draft control pressure tube assembly
6. Hitch cylinder relief valve plug
7. Oil cooler return
8. Unloading and flow control valve assembly
9. Positioning control lever
10. Draft control lever
11. Variable valve to flow control tube
12. Auxiliary valves

DISASSEMBLY

1. Remove the end cap (2). See Fig. 43.

2. The end cap and sleeve assembly may be disassembled if necessary. See Fig. 44.

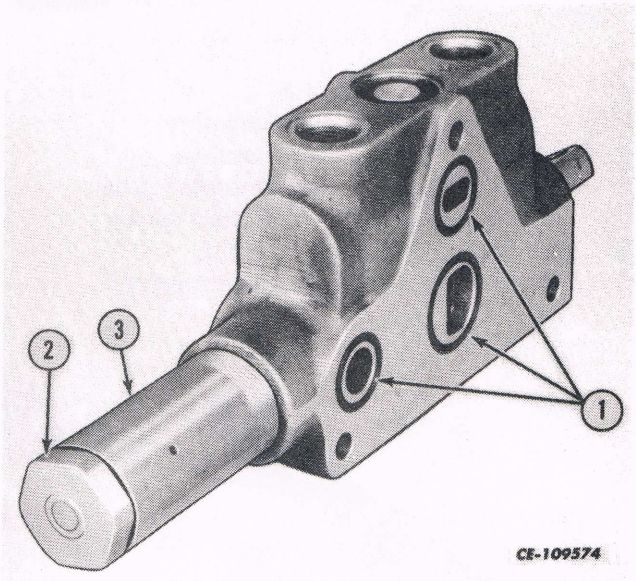

Fig. 43
Auxiliary Valve.
1. "O" rings 2. End cap 3. Sleeve

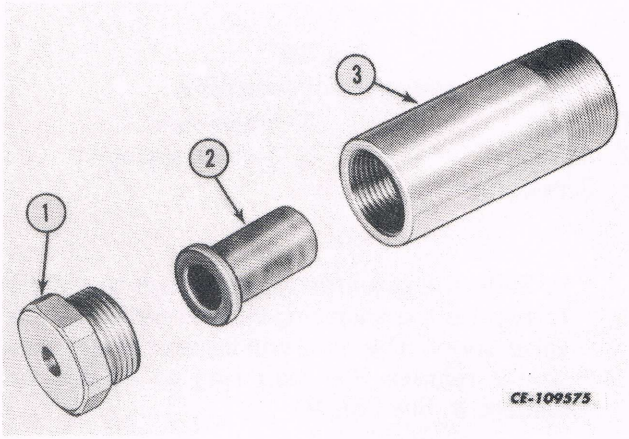

Fig. 44
Valve End Cap, Guide and Sleeve.
1. End cap 2. Actuator guide 3. Sleeve

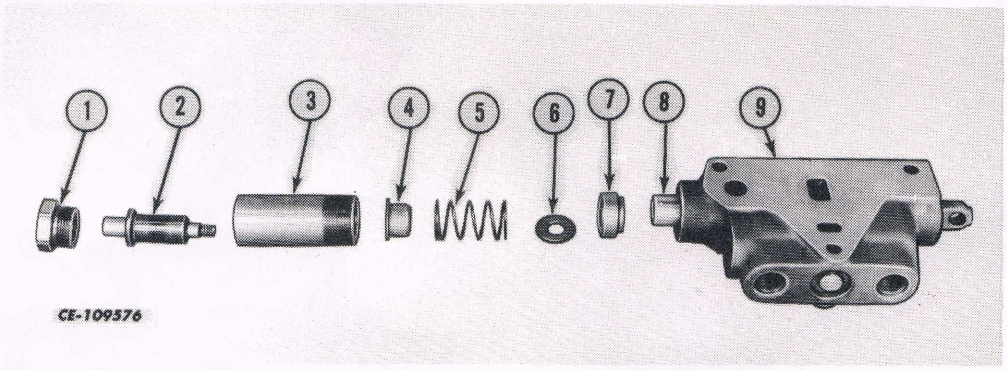

Fig. 45
Valve End Cap Assembly.

1. End cap
2. Detent assembly
3. Sleeve
4. Retainer
5. Centering spring
6. Washer
7. "O" ring retainer
8. Spool
9. Valve body

3. Remove the detent assembly (2, Fig. 45) from the valve.

4. After the detent assembly is removed, remove the sleeve (3, Fig. 45). The rest of the parts may now be removed from the valve.

5. To disassemble the detent assembly, remove the adjusting screw (2), spring (3), washer (4) and balls (5 and 6) out. Push the piston (7) out with a long, thin punch. See Fig. 46.

6. Wrap emery cloth around the actuator and, using pliers, remove the actuator. See Fig. 47.

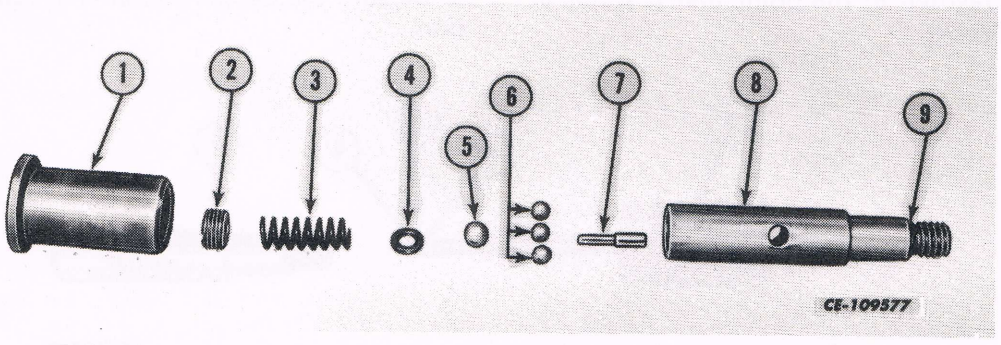

Fig. 46
Actuator Assembly.

1. Detent sleeve
2. Adjusting screw
3. Spring
4. Washer
5. Actuating ball
6. Lock balls
7. Piston
8. Actuator
9. "O" ring

DISASSEMBLY - Continued

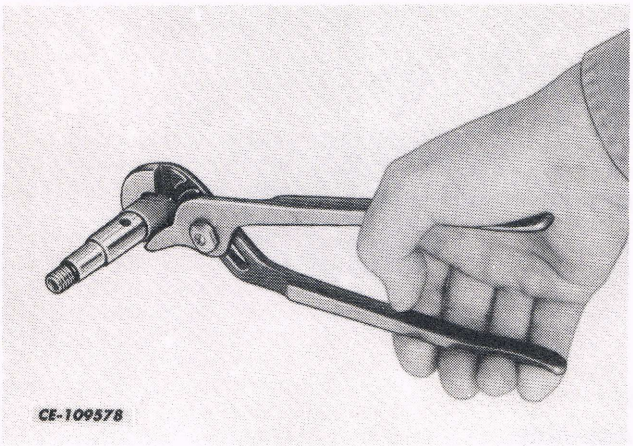

Fig. 47
Removing the Actuator.

7. Using carburetor jet tool, FES-36 (1), remove the actuator valve plug (2), "O" ring (3) and back-up washer (4). See Fig. 48.

8. Remove the check poppet retainer snap ring. To remove the retainer and check poppet, pry up on the flange of the retainer and check the parts for wear. Replace both "O" rings. See Fig. 49.

9. Carefully wash the button plug in the end cap and be sure it is not damaged. This button plug must not be painted to the point that it forms a seal when installed.

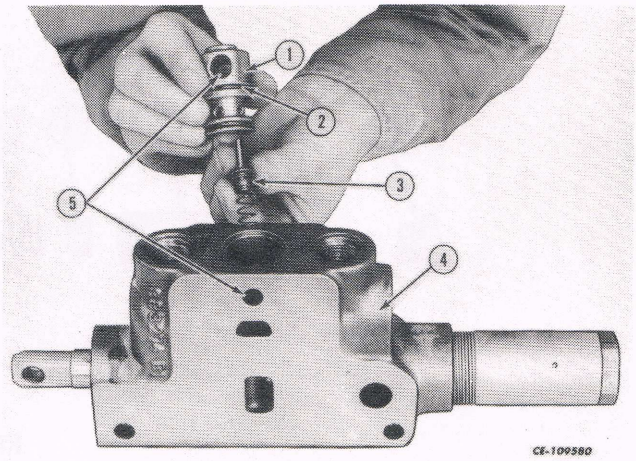

Fig. 49
Check Poppet Assembly.

1. Retainer
2. "O" ring
3. Check poppet.
4. Valve body
5. Bolt holes

INSPECTION AND REPAIR

1. Replace all "O" rings. (Note the one at the opposite end of the valve body from the end cap.)

2. Check the springs against Specifications.

3. Check the spool and body for scoring and wear. Replace as an assembly, if necessary, as the spool and body are not serviced individually.

4. Check the detent balls and detent sleeve for wear and replace if necessary.

5. Be sure the detent piston is in reusable condition.

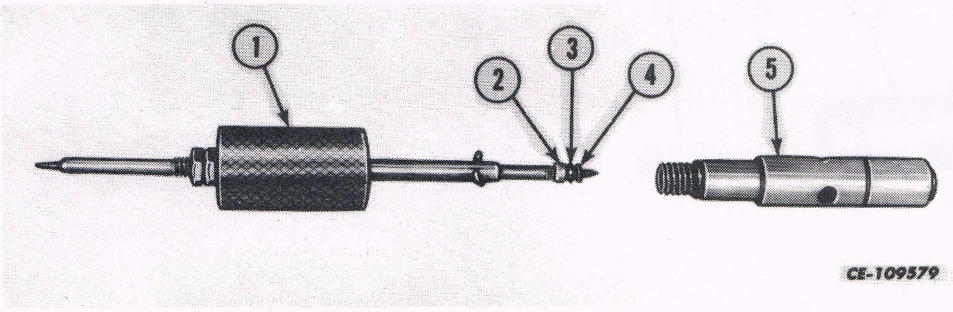

Fig. 48
Actuator Assembly.

1. FES-36
2. Actuator valve plug
3. "O" ring
4. Back-up washer
5. Actuator

REASSEMBLY

1. Reassemble in the reverse of disassembly, with special attention to the following:

a. Dip all parts in clean Hy-Tran fluid to ease in reassembling.

b. Be sure the bolt holes in the check poppet retainer and valve body are precisely lined up, or the bolts will not go into place.

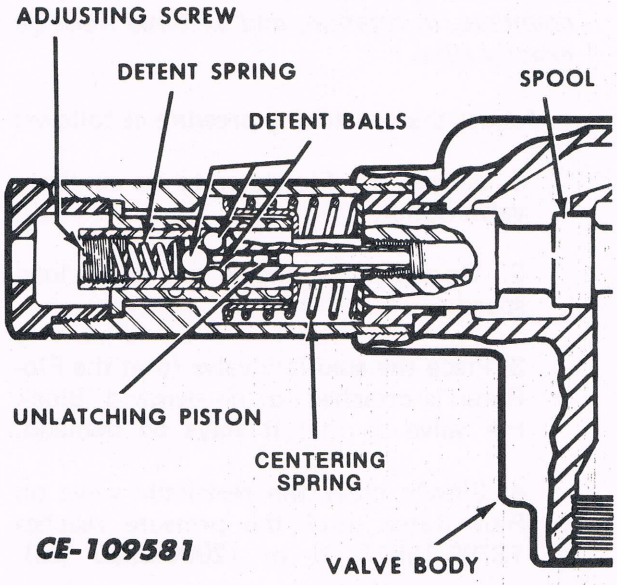

Fig. 50
Valve Assembly.

c. To ease assembly of the valve with detent, assemble the actuator and centering mechanism to the spool, install the spool in the valve body and install the sleeve. Then put the position sleeve in place, followed by the detent balls, washer, spring and adjusting screw. Put the small balls in first, followed by the large one. Stick the washer on the spring with petroleum jelly to insure that the washer will be centered over the actuating ball.

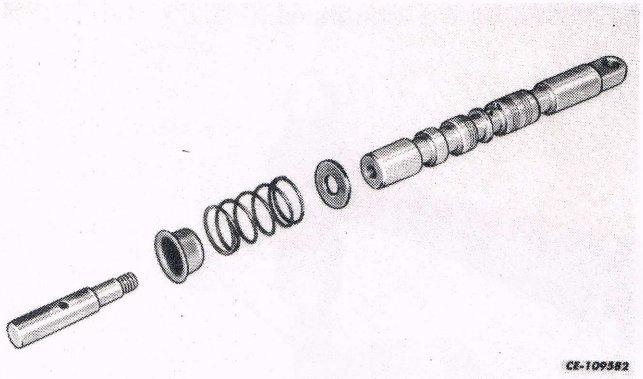

Fig. 51
Actuator Assembly.

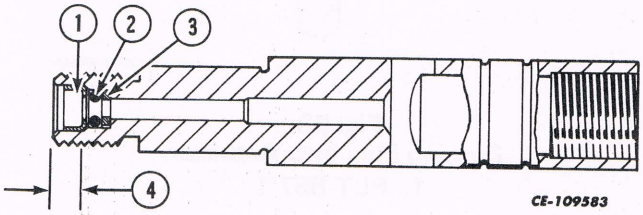

Fig. 52
Actuator Plug, O-Ring and Washer.

1. Actuator valve plug
2. "O" ring
3. Back-up washer
4. Distance plug is to be installed, 4.3 to 4.6 mm (.171 to .181 inch).

d. A new actuator plug (1), "O" ring (2) and back-up washer (3) is to be installed as shown in Fig. 52. Tool PLT-857-1 (1, Fig. 53) is to be used to tap the plug in the specified distance.

REASSEMBLY - Continued

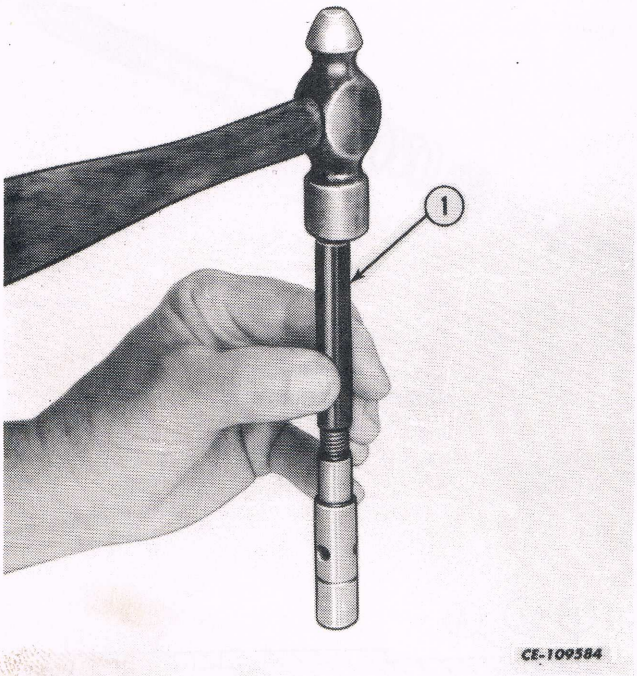

Fig. 53
Tapping Plug into Actuator.
1. PLT-857-1

INSTALLATION AND ADJUSTMENT

1. Install the valve or valves in the reverse of removal, with special attention to the following:

a. Use petroleum jelly on "O" rings to keep them in place.

b. Torque the mounting bolts to 27 - 33 N·m (20 - 25 ft-lbs). Do not over-torque or binding of the valve spool may result.

NOTE: *Must be torqued in 7 N·m (5 lb) increments, in rotation, and all three must be exactly alike.*

c. Adjust the unlatching pressure as follows:

1. Attach the Flo-Rater to an auxiliary valve outlet.

2. Operate the engine at rated load speed.

3. Place the auxiliary valve (that the Flo-Rater is attached to) on demand. Block the valve so that it stays on demand.

4. Slowly close the restrictor valve on Flow-Rater until the pressure reaches 13789-15512 N· m (2000-2250 psi).

5. Remove the block holding the valve on demand.

6. Adjust the valve so that the unlatching pressure is 13789-15512 N· m (2000-2250 psi) or below. Turn the adjusting screw out to decrease the unlatching pressure. Turn the adjusting screw in to increase the unlatching pressure.

PROBLEM	CAUSE	TEST
Hitch will not raise, but activating any auxiliary valve will cause it to raise.	1. Unloading valve orifice plugged. 2. Unloading valve piston sticking. 3. Unloading valve body assembly not seating or body assembly loose.	1, 2 and 3 — Put position control lever in "LIFT" position. Put auxiliary valve on demand.
Hitch will not raise.	1. System relief valve spring broken or valve leaking. 2. Spring in cushion relief valve is broken. 3. Internal linkage disconnected from control lever. 4. Open circuit due to damaged "O" ring or sand hole in fluid passages.	1. Check with Flo-Rater per item 1, above. 2. Remove top cover and observe. 3. Remove top cover and inspect linkage. 4. Disassemble and inspect.
Hitch lifts load very slowly.	1. Unloading valve leaking. 2. Load is excessive. 3. Main relief valve is leaking or opening below specified pressure, 15857-17236 kPa (2300-2500 psi). 4. Cushion valve in cylinder leaking. 5. Cylinder scored or "O" ring on piston is damaged. 6. Flow control valve stuck in slow position. 7. Inefficient pump.	1. If placing auxiliary valve on demand corrects the problem, then the unloading valve ball is not seating. 2. Reduce load. 3. Test with Flo-Rater. 5. Observe for cylinder leakage after removing top cover. 6. Observe through rear opening, if flow from top cover decreases substantially when position control is moved out of action portion of the quadrant, action control is O. K. 7. Test with Flo-Rater.
Hitch raises to full height and will not lower regardless of lever position.	1. Improper adjustment of load sensing linkage. 2. Sensing beam bas has become mislocated in sensing beam spring	1. Readjust load sensing fingers as shown in this section. 2. Refer to figure 10, page 10 this section. Reinstall sensing beam bar and correctly orientate spring.

HITCH AND HYDRAULICS

TROUBLE SHOOTING CHART

PROBLEM	CAUSE	TEST
Hitch lowers slowly or does not lower (no load).	1. Drop poppet sticking.	1. Replace "O" ring on poppet and be sure it is free in bore.
	2. Piston sticking in cylinder.	2. Remove cushion valve and see if hitch then lowers.
	3. Weak, main control valve spring.	3. Replace spring.
Hitch will not lower. (Hitch loaded)	1. Main control valve spool sticking or spring damaged.	1. Check by observing linkage after removing adjustment cover. Spool sticking is nearly always due to dirt contamination.
	2. "O" ring on drop poppet is damaged or drop poppet is sticking.	2. Remove and inspect.
	3. Lower sensing finger is behind the pick-up finger.	3. Inspect.
Hitch lowers very slowly. (Hitch loaded)	1. Position control lever is in action control range or linkage is out of adjustment.	1. Place position control lever 12.7 mm (1/2 inch) above the action control zone. If the hitch lowers at the correct speed, the linkage is properly adjusted.
	2. Action control valve spool or piston sticking.	2. Disassemble and inspect.
	3. "O" ring on drop poppet is damaged.	3. Inspect.
Hitch lowers load too fast. (Position control is not in action control zone.)	1. Drop retarding piston is sticking open.	1. Disassemble and inspect.
Hitch lowers load too fast in action control zone.	1. Improper adjustment of action control valve.	1. Inspect.
Hitch goes on high pressure but does not raise.	1. Seat in drop poppet loose in valve body.	1. Remove valve assembly, Refer to procedure, this section. Clean and Loctite seat or replace valve.
	2. Failure of drop poppet to open.	2. Remove valve assembly and inspect for cause.
	3. Restriction in passage, control valve to piston.	3. Inspect and remove restriction.

HITCH AND HYDRAULICS
TROUBLE SHOOTING CHART

PROBLEM	CAUSE	TEST
Hitch raises or lowers, but does not maintain its position. The hydraulic system repeatedly corrects position of the hitch (hiccups).	1. Leakage from damaged "O" ring, scored cylinder or piston seal ring.	1. Observe after removing top cover.
	2. Cylinder cushion relief valve leaking.	2. Remove top cover and observe or check for dirt in valve by putting a heavy weight on the hitch, and drive over some bumps, or lower the hitch to about 50.8 mm (2 inches) from the ground, lift the hitch by hand to the top of its travel and drop it. Either procedure should open the cushion valve and blow the dirt out. If not, replace the valve.
	3. Drop poppet check valve ball not seated, damaged seat or ball.	3. Inspect.
	4. Drop poppet ball seat binding in the drop poppet.	4. Inspect.
Hydraulic system stays on high pressure.	1. The hitch hydraulic system is designed to "fail safe" on low pressure. If the unit remains on high pressure, the lift linkage is improperly adjusted or disconnected.	1. Inspect. Adjust per instructions in this section.
	2. Auxiliary valve not in neutral.	2. Place valve in neutral (correct any malfunction of unlatching or detent mechanism).
	3. Mechanical interference.	3. Inspect and eliminate.
System stays on high pressure after lifting load. Slight movement of position control lever toward "drop" returns the system to low pressure.	1. Leak in the piston side of the unloading valve circuit.	1. Check unloading valve piston.
Hitch still senses with load control in "OFF" position.	1. Improper adjustment of load sensing linkage.	1. Readjust load sensing finger as shown in this section.
Hitch response is too fast with raise rate set in the slow setting.	1. Improper adjustment of the variable orifice.	1. Readjust per instructions in this section.

HITCH AND HYDRAULICS

TESTING HYDRAULIC STEERING CIRCUIT AND SYSTEM RELIEF CIRCUIT

1. Hook up Flo-rater Plt-863 (1) as shown in Fig. 54. (The left rear wheel and fender has been removed for illustration purposes.)

2. Start and operate the engine at rated speed (2200 rpm).

3. Restrict the Flo-rater to 8618 kPa (1250 psi) and record the flow which should be 45 litres/min (12 gpm).

4. Restrict the Flo-rater to check the steering relief valve. Approximately 10 litres/min (2-1/2 gpm) flow loss should occur when this starts to dump and the psi reading should be between 10342-11032 kPa (1500-1600 psi).

5. Continue to restrict the Flo-rater to check the system relief valve. This will occur when the litres/min (gpm) flow is no longer recording on the gauge.

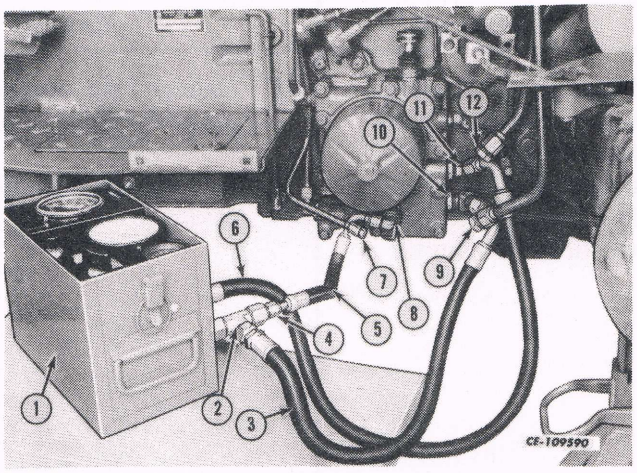

Fig. 54
Checking the Steering Relief Valve.

1. Flo-rater (PLT-863)
2. Service tee (PLT-862-19)
3. Hose (470 251 R1)
4. Reducer (9 403 402) and Nut (9 403 529)
5. Hose (373 255 R91)
6. Hose (470 251 R1)
7. Plug (PLT-862-4)
8. Power steering outlet
9. Plug (PLT-862-6)
10. Outlet port
11. Return port
12. Plug (PLT-862-6)

CHECKING OIL COOLER BY-PASS VALVE

1. Hook up the Flo-rater PLT-863 (1) as shown in Fig. 55. Connect the inlet line of the flo-rater to the oil cooler outlet port (9, Fig. 55) in the MCV.Connect the outlet line of the flo-rater to the rear frame filler hole.

2. If the tractor is equipped with IPTO, position in disengaged position.

3. With the restrictor valve of the Flo-rater (1) fully opened, operate the engine at 1000 rpm. Restrict the Flo-rater until a 414 kPa (60 psi) reading is obtained on the PLT-860-4 gauge (2) which is teed to the inlet. Flow through the Flo-rater must not drop below 7.571 l (2 gpm). See Fig. 55.

4. Further restrict the Flo-rater and observe the pressure reading which must be between 517 - 861 kPa (75 - 126 psi) at which time there will be no lpm (gpm) flow.

5. If the above reading cannot be obtained, the oil cooler by-pass valve is not functioning properly.

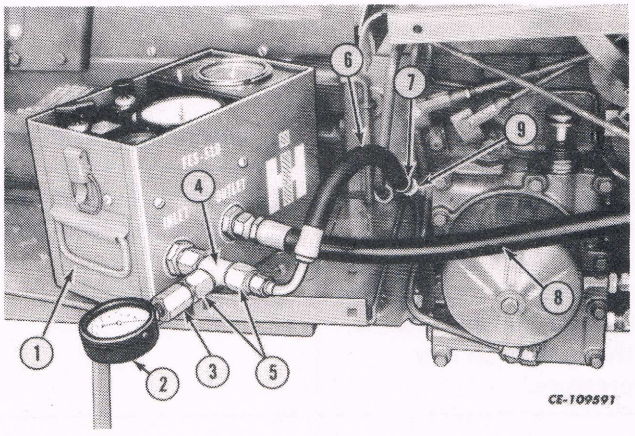

Fig. 55
Checking the Oil Cooler Relief Valve.

1. Flo-rater (PLT-863)
2. Gauge (PLT-860-4)
3. Female adapter (FES 70-16)
4. Service tee 862-19)
5. Reducer (9 403 402) and Nut (9 403 529)
6. Hose (373 255 R91)
7. Reducer (PLT-862-15 and 16)
8. Hose (470 251 R1)
9. Oil cooler outlet port

TRACTOR WITH HYDROSTATIC TRANSMISSION AND IPTO

The drawings in Figures 56 and 57 are of the same hydraulic circuitry, one using the conventional symbols and the other using the new ISO symbols (U.S.A.S.I.).

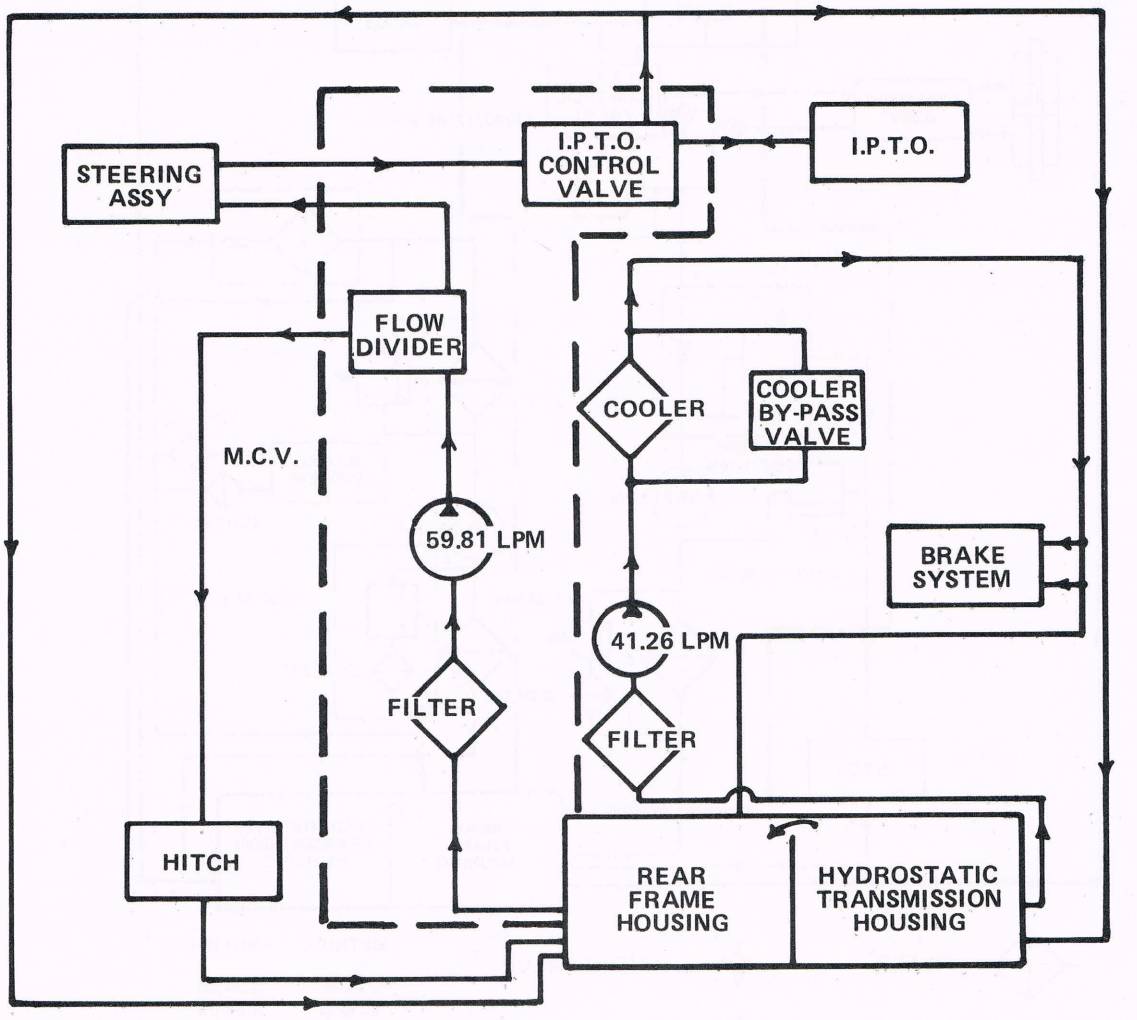

METRIC	ENGLISH
41.26 LPM	10.9 GPM
59.81 LPM	15.8 GPM

Fig. 56
Tractor with Hydrostatic Transmission and IPTO (Conventional Symbols)

TRACTOR WITH HYDROSTATIC TRANSMISSION AND IPTO - Continued

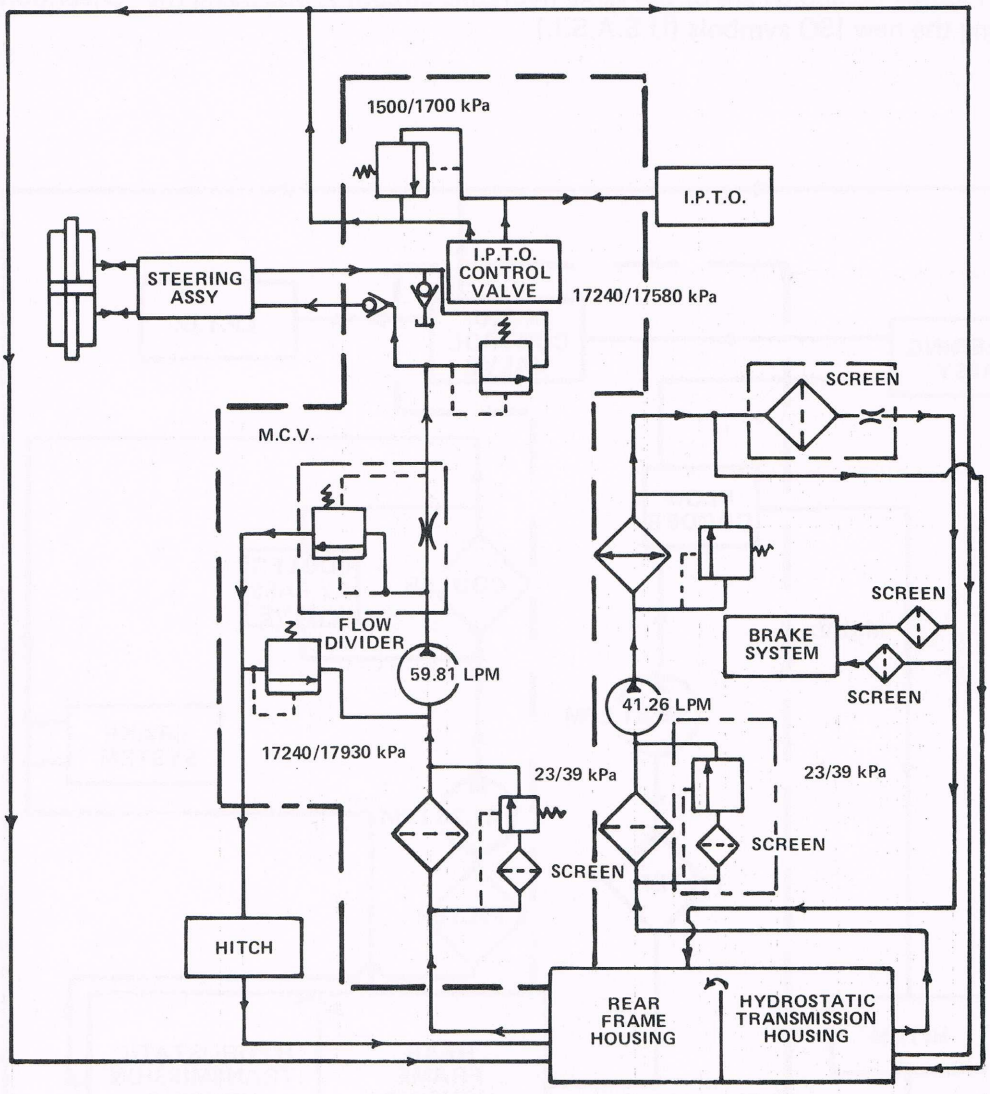

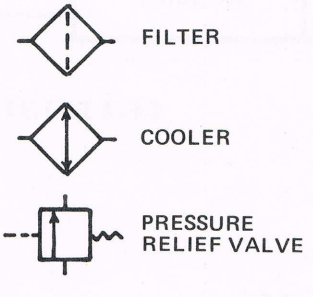

METRIC	ENGLISH
23 kPa	3.34 psi
30 kPA	5.66 psi
41.26 LPM	10.9 GPM
59.81 LPM	15.8 GPM
552 kPa	80.1 psi
689 kPa	99.9 psi
1500 kPa	218 psi
1700 kPa	247 psi
17240 kPa	2500 psi
17580 kPa	2550 psi
17930 kPa	2601 psi

CE-115132 A

Fig. 57
Tractor with Hydrostatic Transmission and IPTO (ISO Symbols)

TRACTOR WITH SYNCHROMESH TRANSMISSION AND IPTO

The drawings in Figures 58 and 59 are of the same hydraulic circuitry, one using the conventional symbols and the other using the new ISO symbols (U.S.A.S.I.).

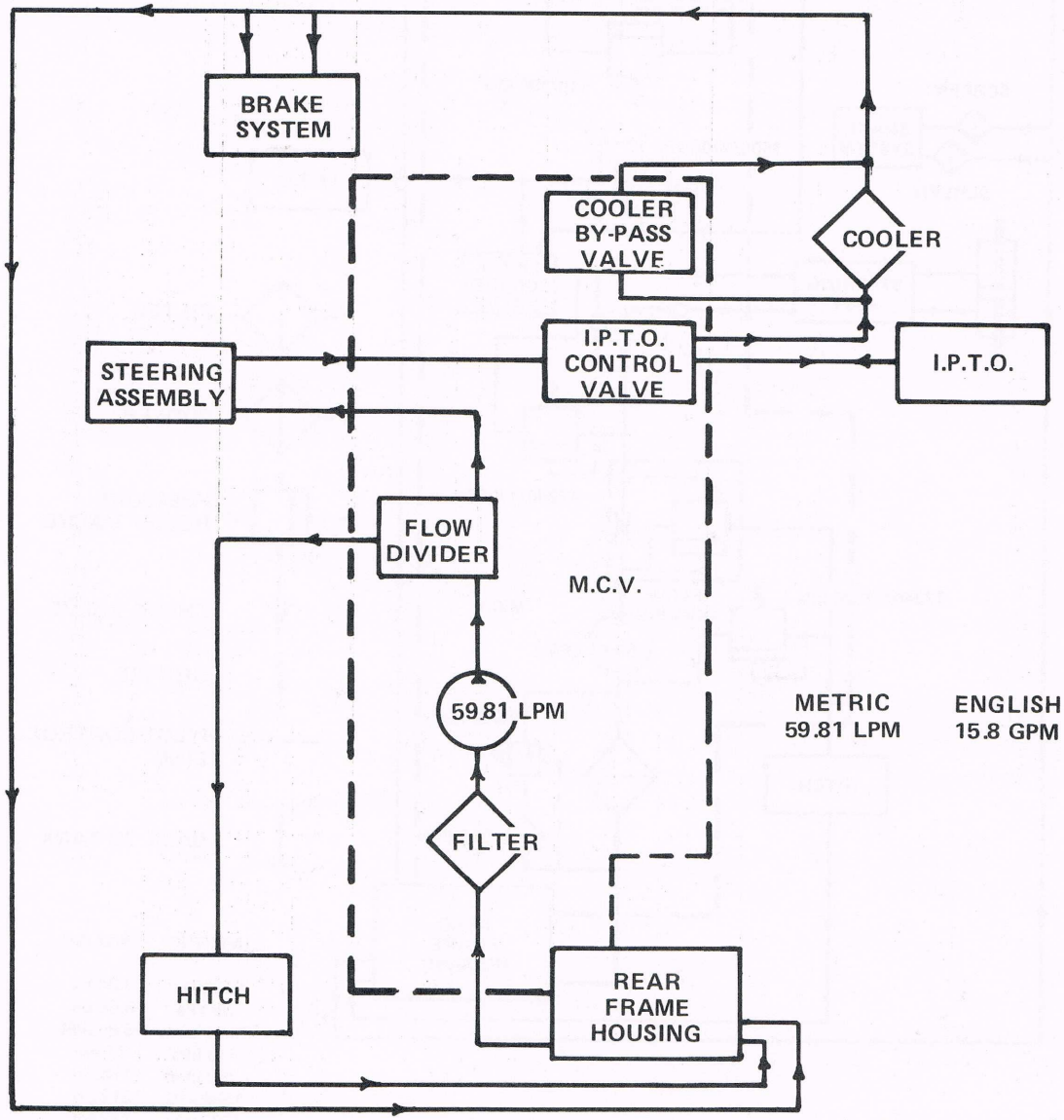

Fig. 58
Tractor with Synchromesh Transmission and IPTO (Conventional Symbols)

TRACTOR WITH SYNCHROMESH TRANSMISSION AND IPTO - Continued

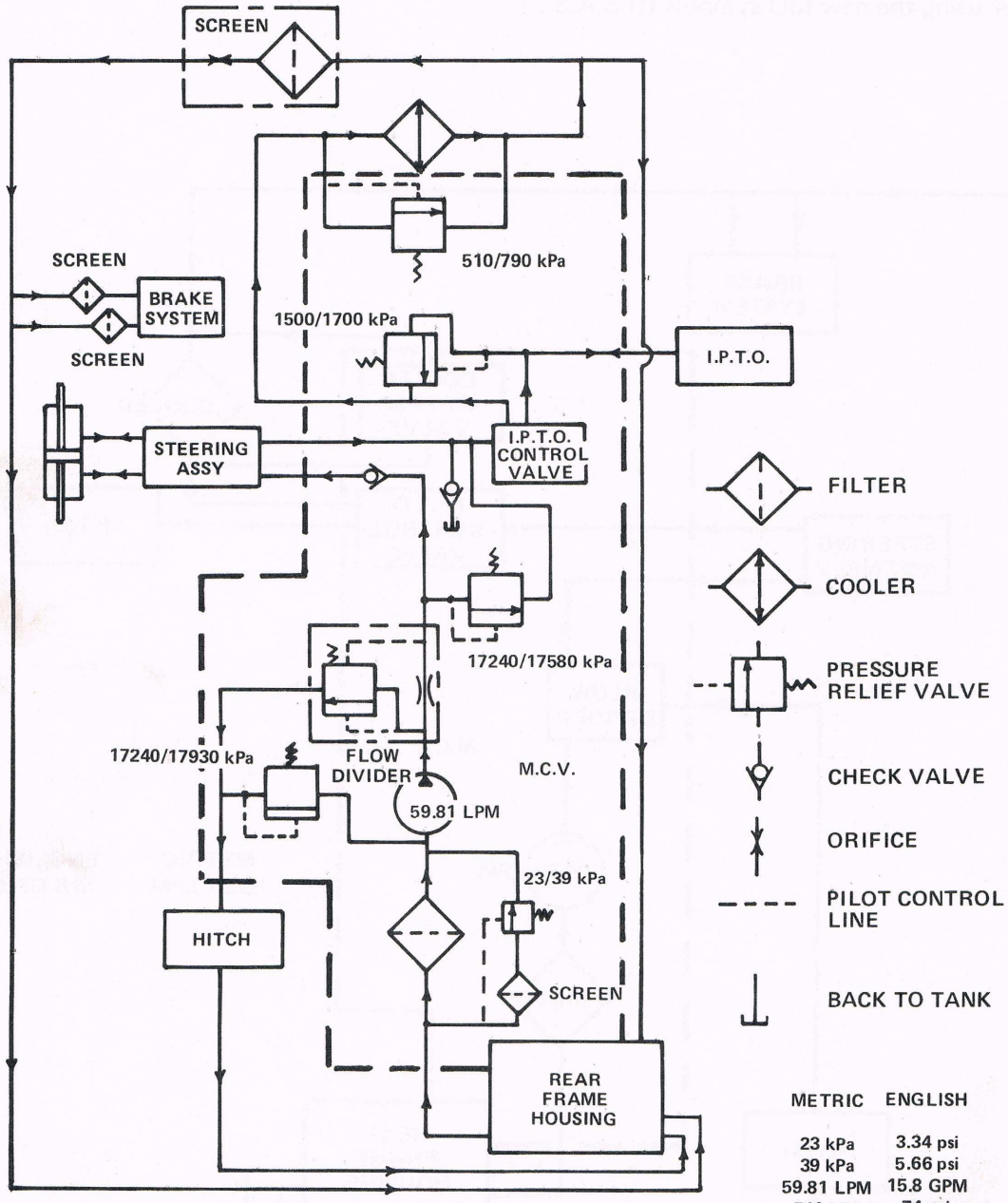

METRIC	ENGLISH
23 kPa	3.34 psi
39 kPa	5.66 psi
59.81 LPM	15.8 GPM
510 kPa	74 psi
790 kPa	115 psi
1500 kPa	218 psi
1700 kPa	247 psi
17240 kPa	2500 psi
17580 kPa	2550 psi
17930 kPa	2601 psi

CE-115127 A

Fig. 59
Tractor with Synchromesh Transmission and IPTO (ISO Symbols)

LOADER WITH TORQUE CONVERTER TRANSMISSION

The drawings in Figs. 60 and 61 are of the same hydraulic circuitry, one using the conventional symbols and the other using the new ISO symbols (U.S.A.S.I.).

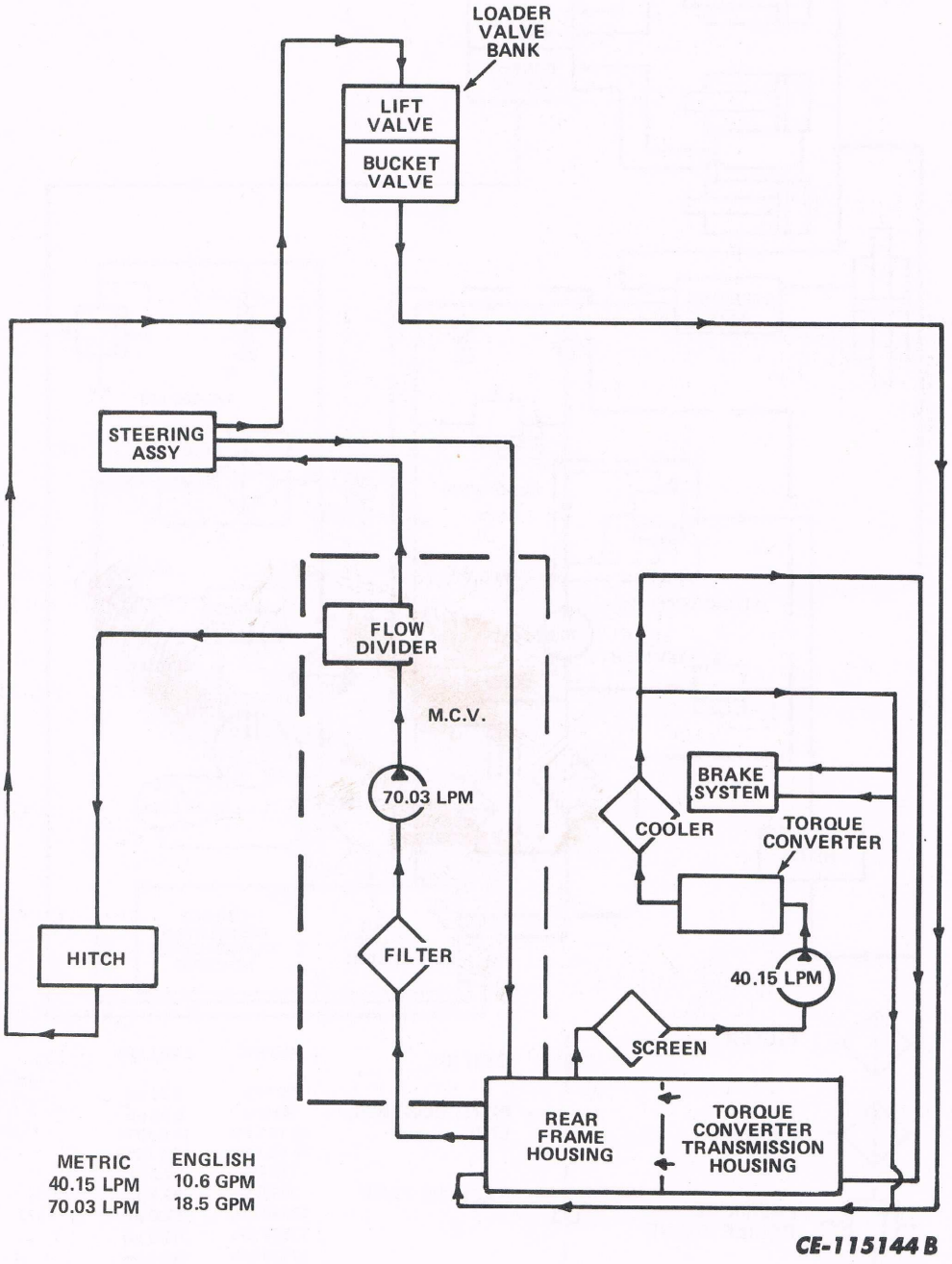

Fig. 60
Loader with Torque Converter Transmission (Conventional Symbols)

LOADER WITH TORQUE CONVERTER TRANSMISSION - Continued

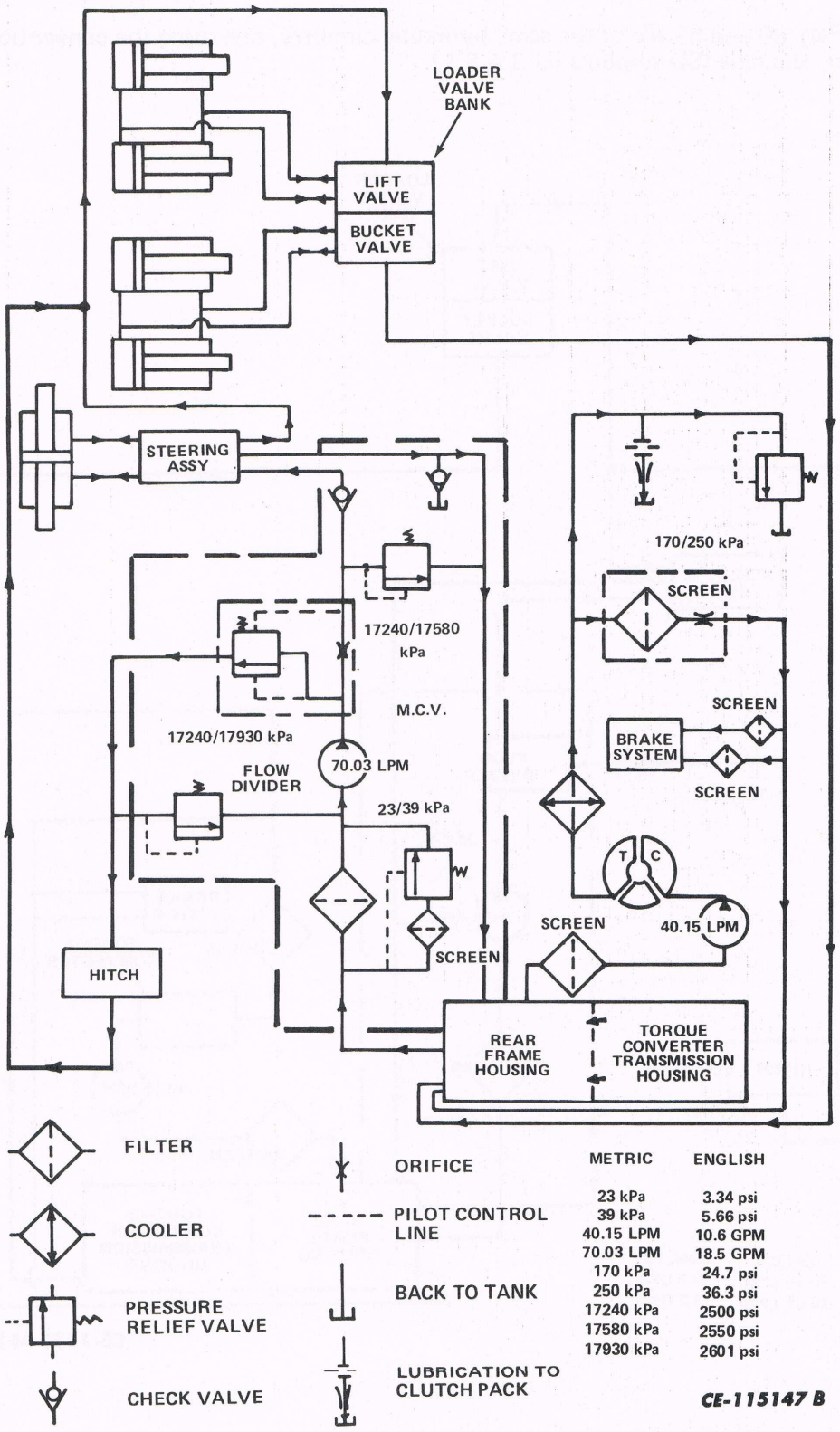

Fig. 61
Loader with Torque Converter Transmission (ISO Symbols)

LOADER WITH HYDROSTATIC TRANS–MISSION AND IPTO

The drawings in Figs. 62 and 63 are of the same hydraulic circuitry, one using the conventional symbols and the other using the new ISO symbols (U.S.A.S.I.).

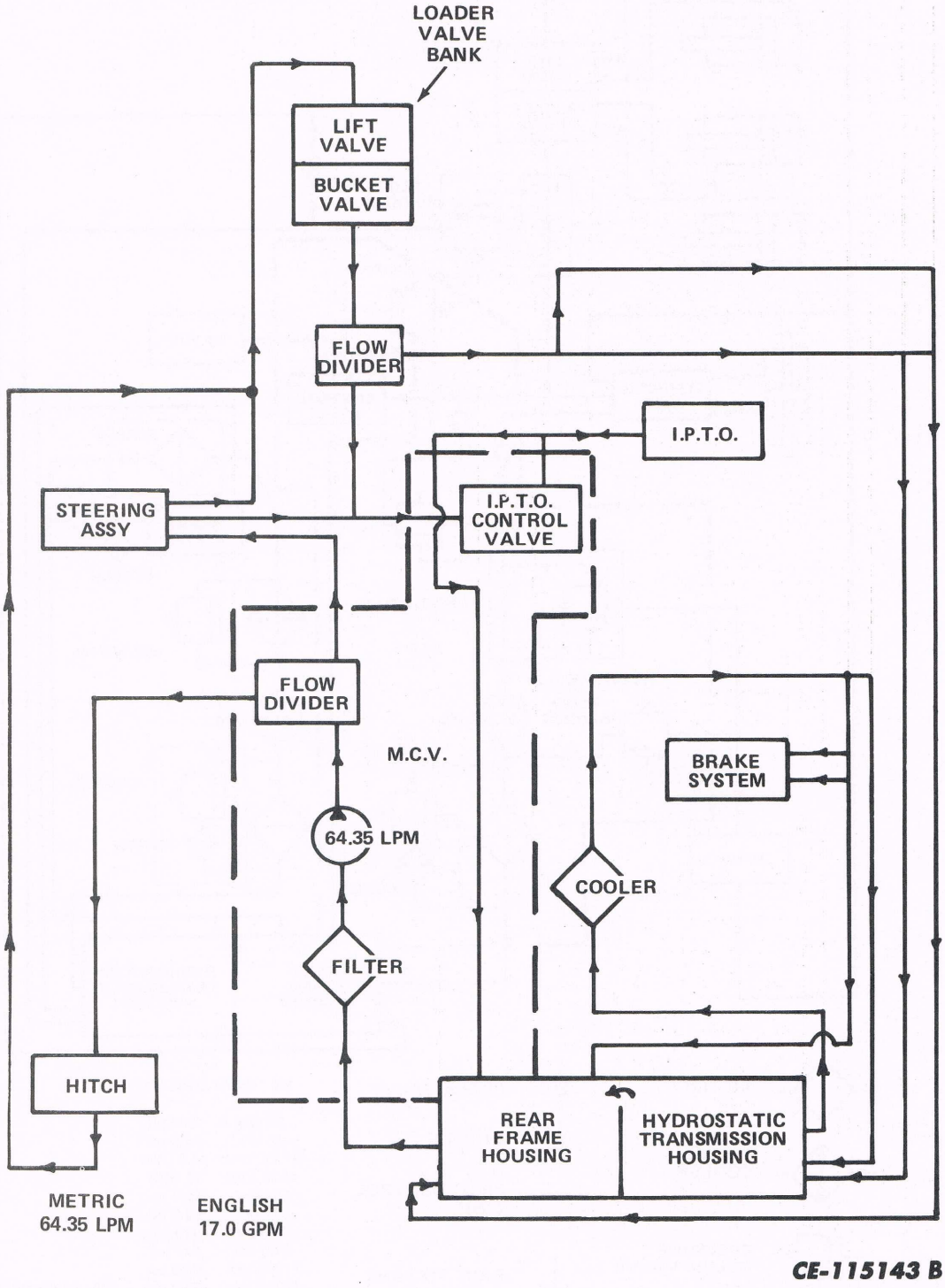

Fig. 62
Loader with Hydrostatic Transmission and IPTO (Conventional Symbols)

LOADER WITH HYDROSTATIC TRANSMISSION AND IPTO - Continued

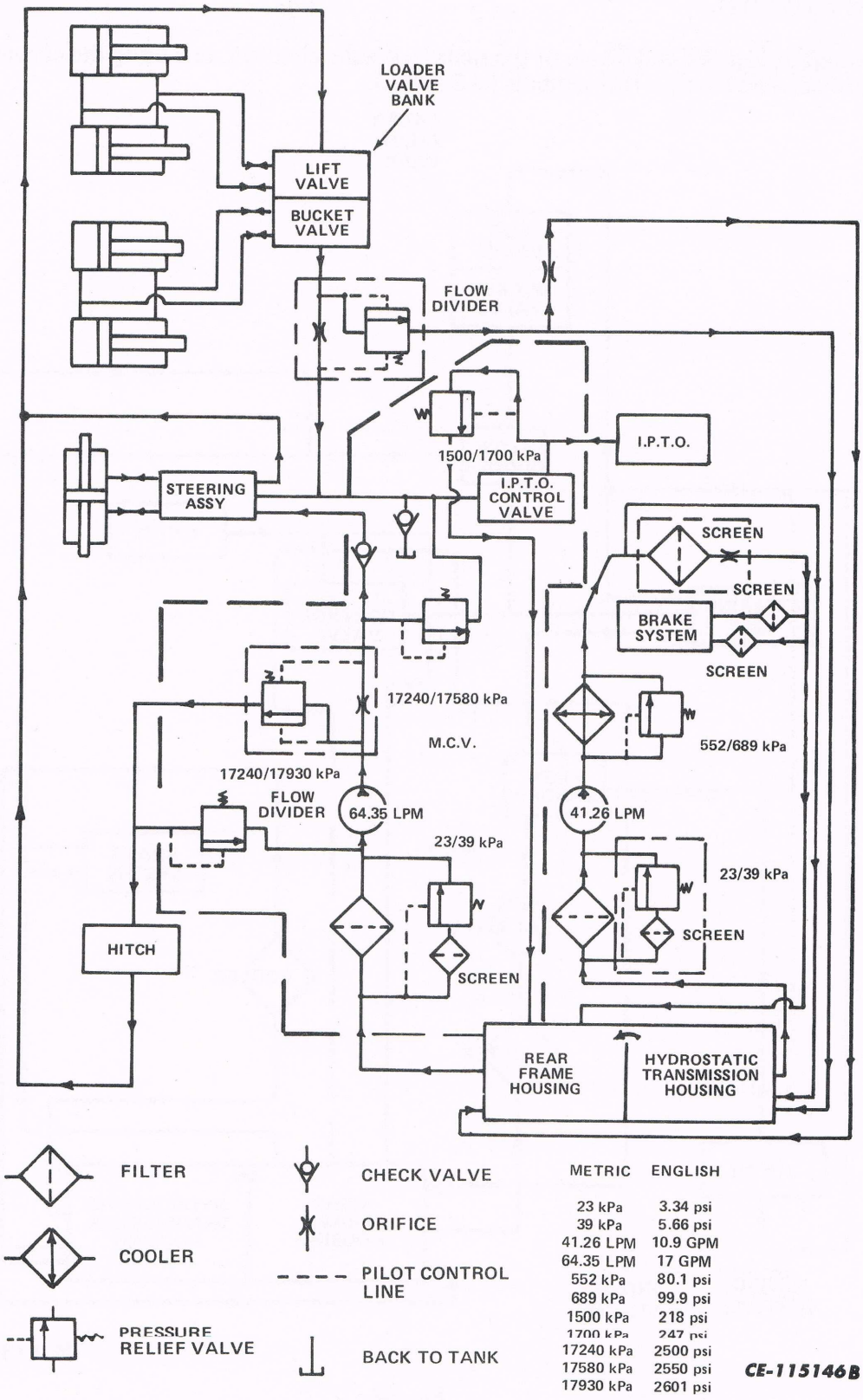

Fig. 63
Loader with Hydrostatic Transmission and IPTO (ISO Symbols)

LOADER WITH SYNCHROMESH TRANSMISSION WITH IPTO

The drawings in Figs. 64 and 65 are of the same hydraulic circuitry, one using the conventional symbols and the other using the new ISO symbols (U.S.A.S.I.).

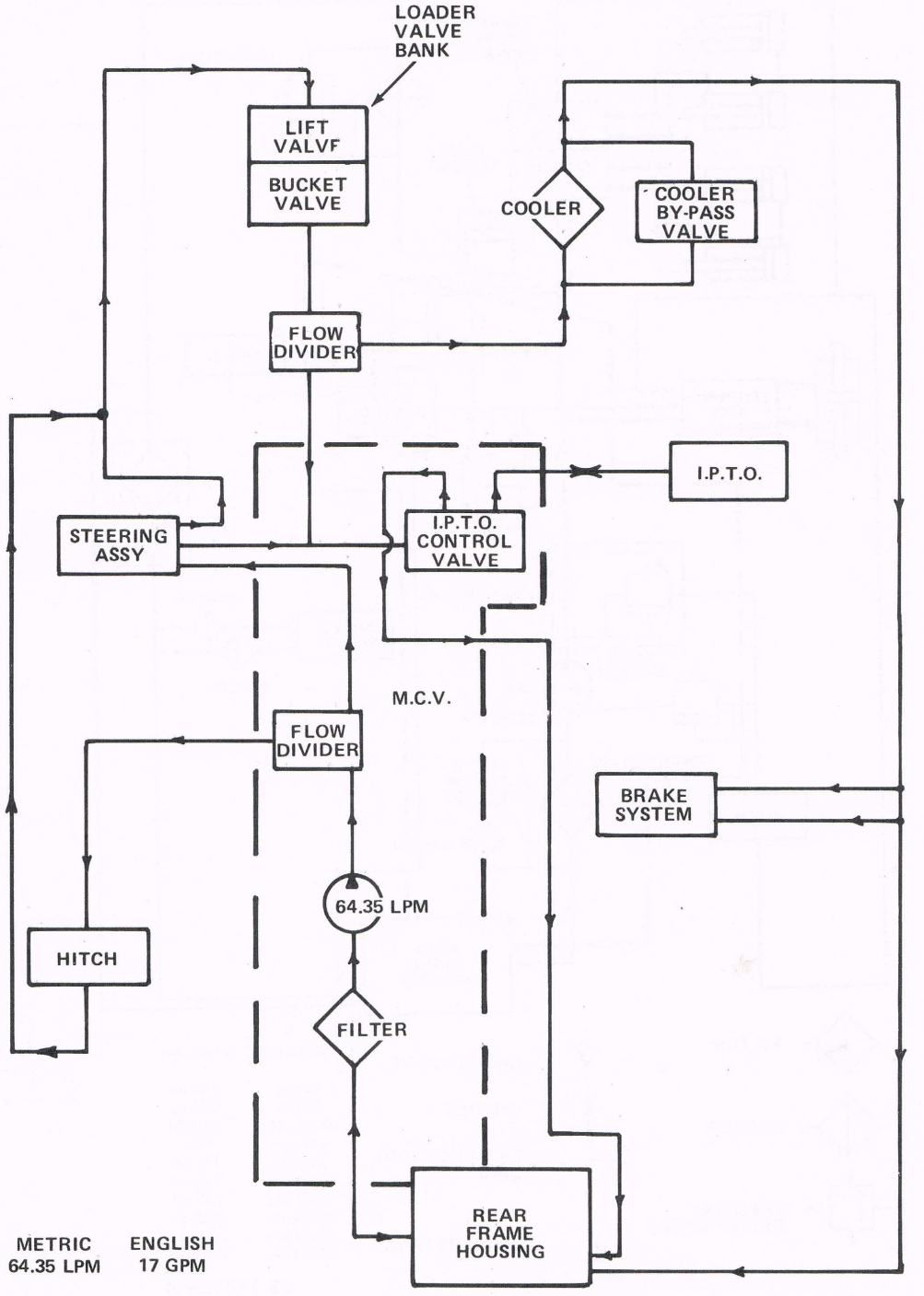

CE-115135B

Fig. 64
Loader with Synchromesh Transmission and IPTO (Conventional Symbols)

LOADER WITH SYNCHROMEST TRANSMISSION WITH IPTO - Continued

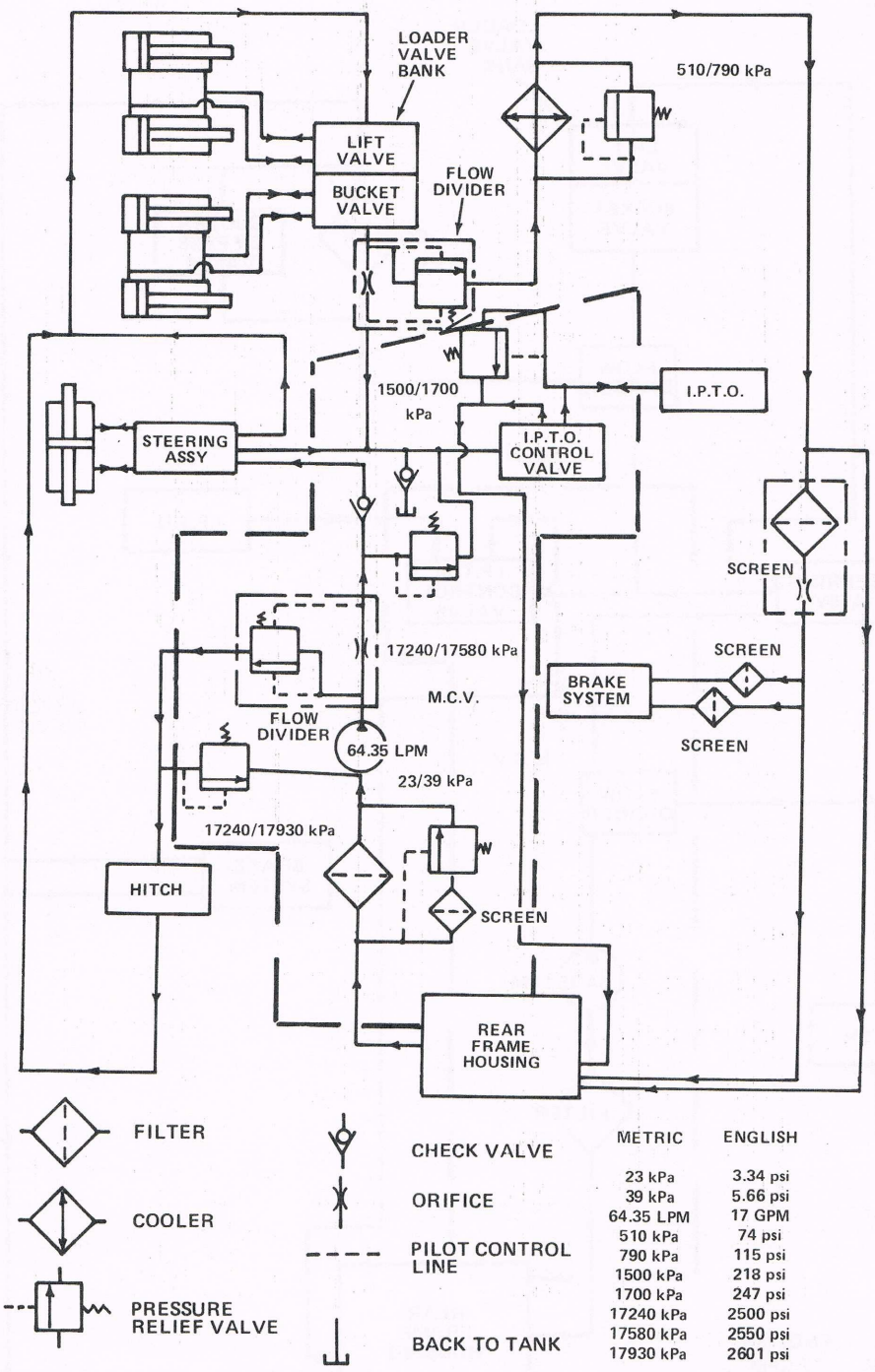

METRIC	ENGLISH
23 kPa	3.34 psi
39 kPa	5.66 psi
64.35 LPM	17 GPM
510 kPa	74 psi
790 kPa	115 psi
1500 kPa	218 psi
1700 kPa	247 psi
17240 kPa	2500 psi
17580 kPa	2550 psi
17930 kPa	2601 psi

Fig. 65
Loader with Synchromesh Transmission and IPTO (ISO Symbols)

FRONT END LOADER

CONTENTS

LOADER VALVE BANK

BUCKET CONTROL VALVE OVERHAUL

BOOM CONTROL VALVE OVERHAUL

LOADER BUCKET SELF-LEVELING VALVE

BOOM AND BUCKET CYLINDERS

SPECIFICATIONS

NOTE: *The fluid pressures specified are manufacturer's ratings. Refer to Section 15 for Test Specifications.*

Relief valve opening pressures:

System relief valve	17237 kPa (2500 psi)
Boom circuit relief valve (Lever end of control valve)	18961 kPa (2750 psi)

Special Torques

Valve bank cap screws	47 N·m (35 lbf-ft)
Cylinder piston rod nuts	644 N·m (475 lbf-ft)
Cylinder retaining rings	644 N·m (475 lbf-ft)

GENERAL (Refer to Fig. 1)

The loader control valves are open center design sectional valves. The valve sections are "stacked" with a single end cover forming a "valve bank".

When the loader is not in operation, fluid entering the end cover (4) flows through the open center passage, to the bucket control valve (7) and back through the return passage, out the return port (2) of the end cover to the cooler and pump suction manifold. See Fig. 1.

The system relief valve (1) limits fluid pressure during loader operation.

A circuit relief valve (5) located in the control end of the boom control valve (6) limits circuit pressure on the piston side of the boom cylinders when the control valve is in the neutral or hold position.

The drop check valves (8) prevent backflow of fluid when a control valve is actuated and circuit pressure is greater than initial system pressure. See Fig. 1.

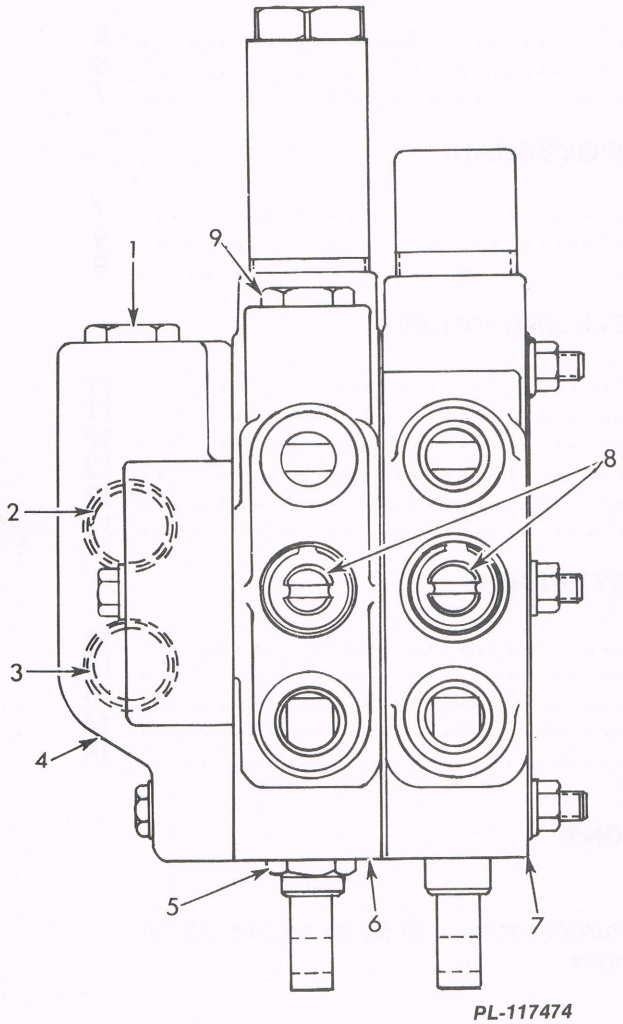

Fig. 1
Loader Valve Bank

1. System Relief Valve
2. Return Port
3. Pressure Port
4. Inlet End Cover
5. Circuit Relief Valve
6. Boom Control Valve
7. Bucket Control Valve
8. Check Valve
9. Plug

REMOVAL

1. Remove the knob (1, Fig. 2) from control lever (2). Remove cover bolts (3) and remove cover (4).

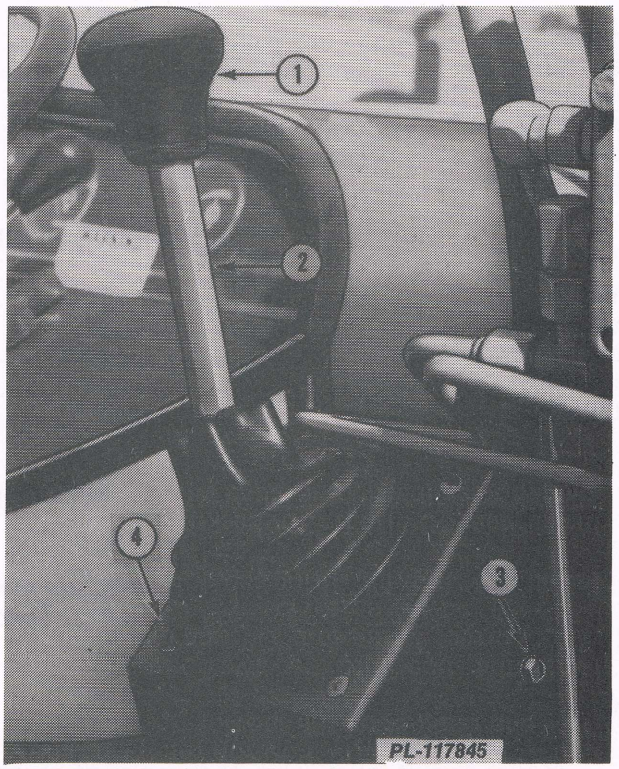

Fig. 2
Cover Removal

1. Knob
2. Control Lever
3. Bolts
4. Cover

REMOVAL (Continued)

2. Disconnect loader linkage (1, Fig. 3) from valve bank (2).

3. Remove the following tubes and hoses (Refer to Fig. 3):

a. Boom cylinder lower hose (3)
b. Boom cylinder raise hose (4)
c. Bucket cylinder dump hose (5)
d. Bucket cylinder retract hose (6)
e. Return hose (7)
f. Loader pressure tube (8)

NOTE: *If equipped with self-leveling attachment (as shown) proceed as follows:*

g. Pressure tube (9)
h. Drain tube (10)
j. Head pressure tube (11)
k. Rod return tube (12)
l. Head return tube (14)

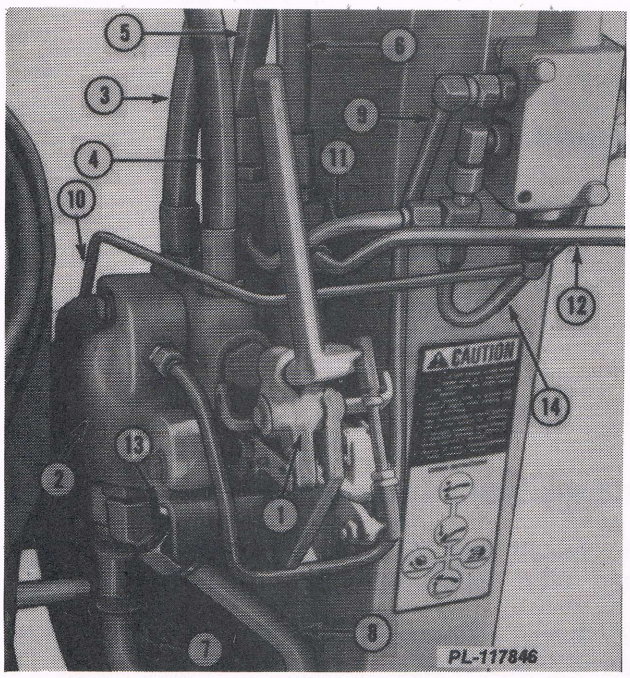

Fig. 3
Tube Removal

1. Loader Linkage
2. Valve Bank
3. Boom Cylinder Lower Hose
4. Boom Cylinder Raise Hose
5. Bucket Cylinder Dump Hose
6. Bucket Cylinder Retract Hose
7. Return Hose
8. Loader Pressure Tube
9. Pressure Tube
10. Drain Tube
11. Head Pressure Tube
12. Rod Return Tube
13. Bolt and Washer
14. Head Return Tube

4. Support the valve bank. Remove the bolt and washer (13) and remove valve bank.

DISASSEMBLY (Refer to Fig. 4)

1. Place valve bank on a work bench with inlet cover (1) down. Remove three nuts (13) and washers (12) securing valve bank together.

2. Remove the bucket control valve (10). Discard "O" rings (6 and 7) between the sections. Refer to "BUCKET CONTOL VALVE OVERHAUL" in this section.

3. Remove the boom control valve (8). Discard the "O" rings (6 and 7) between the sections. Refer to "BOOM CONTROL VALVE OVERHAUL" in this section.

4. Remove the pilot relief valve (5) from the inlet cover.

FRONT END LOADER
LOADER VALVE BANK

DISASSEMBLY (Continued)

5. Remove the "O" ring (2) and back-up washer (3) from inside the end cover and discard.

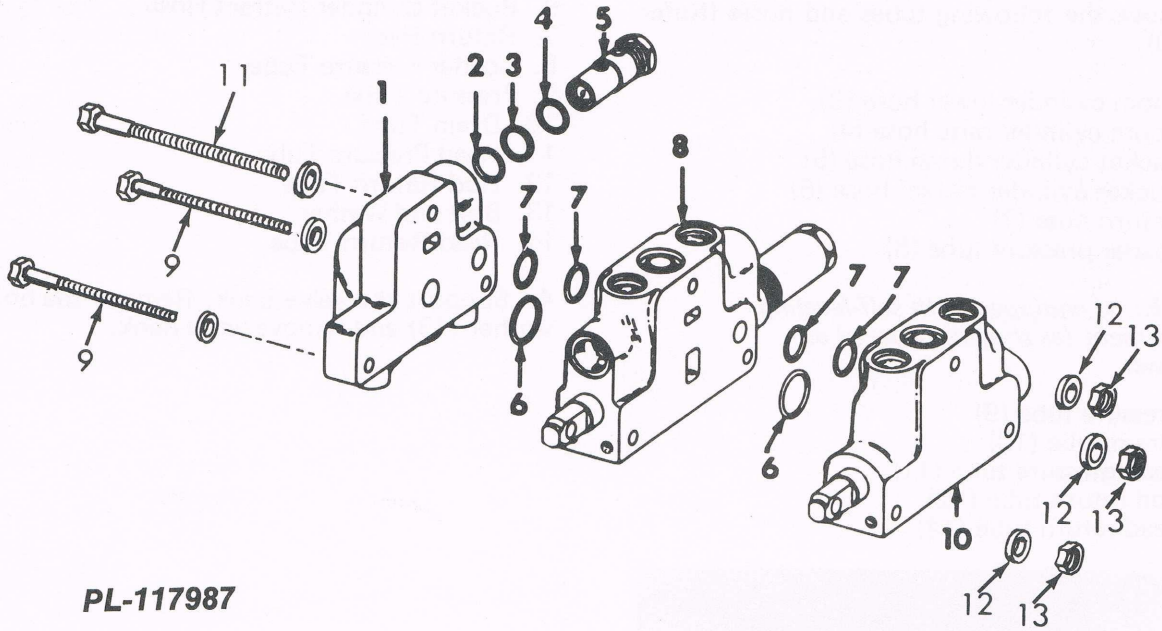

Fig. 4
Valve Bank Disassembly

1. Inlet Cover
2. "O" Ring
3. Back-Up Washer
4. "O" Ring
5. Pilot Relief Valve
6. "O" Ring
7. "O" Ring
8. Boom Control Valve
9. 5-7/8" long Bolt
10. Bucket Control Valve
11. 6-1/4" long Bolt
12. Washers
13. Nut

INSPECTION AND REPAIR

1. Inspect end cover for cracks, defects or worn passages. Check pilot relief valve mounting area for wear.

2. For control valve refer to individual breakdowns in this section.

3. For pilot relief valve refer to breakdown in this section.

REASSEMBLY (Refer to Fig. 4)

1. Install new "O" ring (2) back-up washer (3) and pilot relief valve (5) into inlet cover (1).

2. Install tie bolts (9 and 11) with washers (12) through end cover.

REASSEMBLY (Continued)

3. Coat sealing "O" rings (6 and 7) with petroleum jelly and install in grooves on boom control valve (8).

4. Align boom control valve on tie bolts and carefully slide valve down till it rests on end cover. Be careful not to damage "O" rings.

5. Coat sealing "O" rings (6 and 7) with petroleum jelly and install in grooves on bucket control valve (10).

6. Align bucket control valve on tie bolts and carefully slide valve down till it rests on boom control valve. Be careful not to damage "O" rings.

7. Install nuts (13) with washers (12) to tie bolts. Hand tighten tie bolt being careful not to misalign control valves. Then torque to 42 to 47 N.m (30 to 35 ft.-lbs.)

IMPORTANT: *The back-up washers must face toward the outside of their ports. Install the plug in the spring end of the valve body.*

10. Install the check poppet assembly with new "O" rings and a new back-up washer. Use petroleum jelly to hold the assembly together during installation. Turn the retainer seat to align the bolt hole in the valve body.

INSTALLATION

1. Installation is the opposite of removal.

BUCKET CONTROL VALVE OVERHAUL

DISASSEMBLY (Refer to Fig. 5)

1. Remove the check poppet assembly (1, 2, 3 and 4).

2. Remove the two "O" rings and back-up washer from the poppet retainer (2) and discard.

3. Remove the centering spring cap and remove the spool assembly. Remove the spool control end "O" ring seal and retainer from the valve body.

4. Clamp the control end of the spool in a vise. Remove the centering spring assembly. Remove the spring end "O" ring seal and retainer.

FRONT END LOADERS
BUCKET CONTROL VALVE OVERHAUL

DISASSEMBLY (Continued)

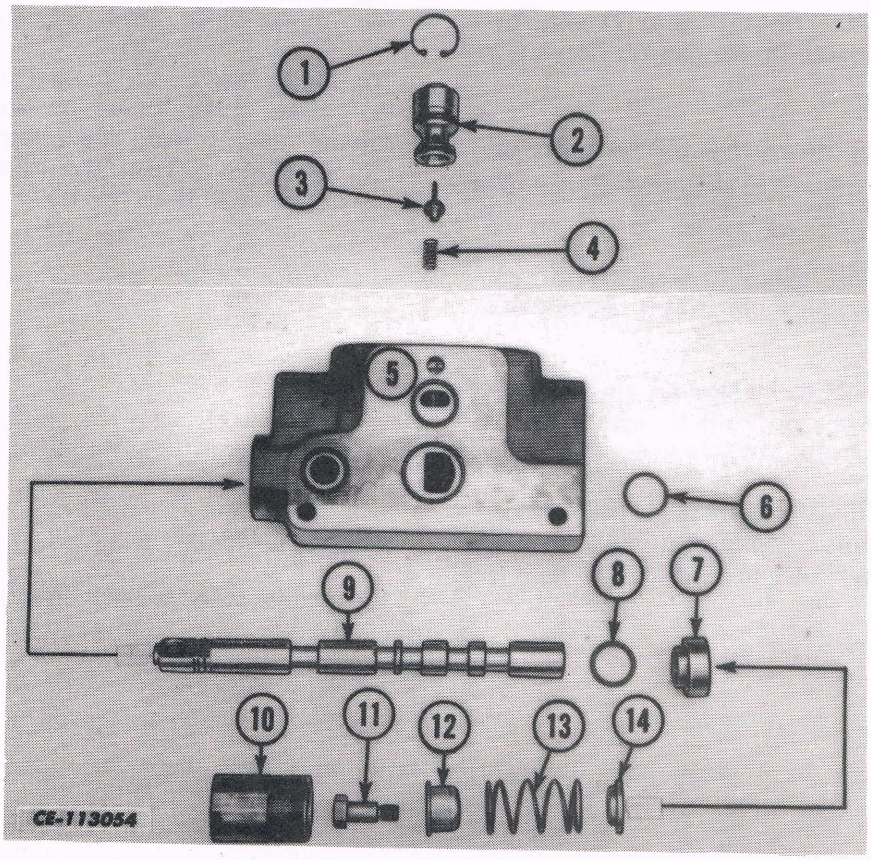

Fig. 5
Bucket Valve Assembly

1. Snap Ring.
2. Poppet Retainer with "O" Ring
3. Check Poppet
4. Check Poppet Spring
5. Valve Body
6. "O" Ring
7. "O" Ring Retainer
8. "O" Ring
9. Spool
10. Centering Spring Cap
11. Screw
12. Spring Retainer - Outer
13. Spring
14. Spring Retainer - Inner

INSPECTION AND REPAIR

1. Discard all 'O" rings and back-up washers. Replace with new.

2. Wash all parts in a suitable solvent. Dry thoroughly with compressed air. Lubricate machined surfaces of usable parts with clear oil.

3. Inspect the valve body and bore for wear scratches or grooves. Remove defects with crocus cloth.

NOTE: *The valve body and spool are not serviceable. If either is damaged, replace the whole valve.*

4. Inspect the spool for easy movement in the valve body. Replace the valve if binding is evident.

5. Check all springs for damage, distortion or weakness. Springs meeting the requirements in "SPECIFICATIONS" should function properly. Springs not meeting the requirements must be replaced.

6. Check the remaining parts for cracks, chips, grooves or wear. Replace if necessary.

REASSEMBLY

1. Clamp the control end of the spool in a vise. Install the centering spring assembly on the spool.

2. Install a new spool "O" ring seal in the control end of the valve body. Position the spring end "O" ring and retainer on the spool.

3. Install the spool into the valve body. Refer to Fig. 5 for correct spring end "O" ring installation.

4. Install the centering spring cap.

5. Install new "O" rings with back-up washers in the plug bores. Install the plugs with new "O" rings.

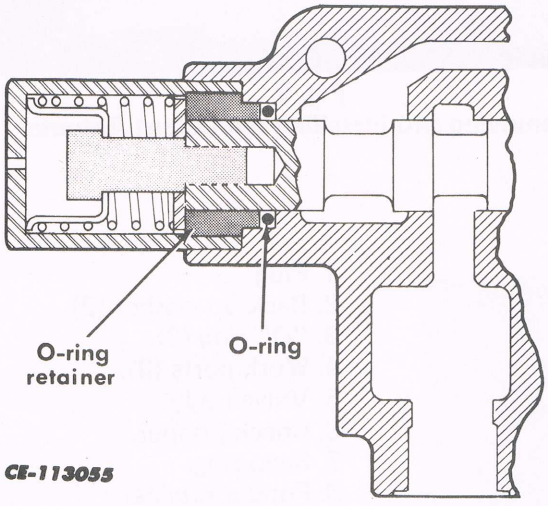

Fig. 6
"O" Ring Installation

IMPORTANT: *The back-up washer (3) must face toward the outside of each port. See Fig. 7.*

6. Install the check poppet assembly with new "O" rings and a new back-up washer. Use petroleum jelly to hold the assembly together during installation and turn the retainer seat (2) to align the bolt hole (1) in the valve body (8). See Fig. 7.

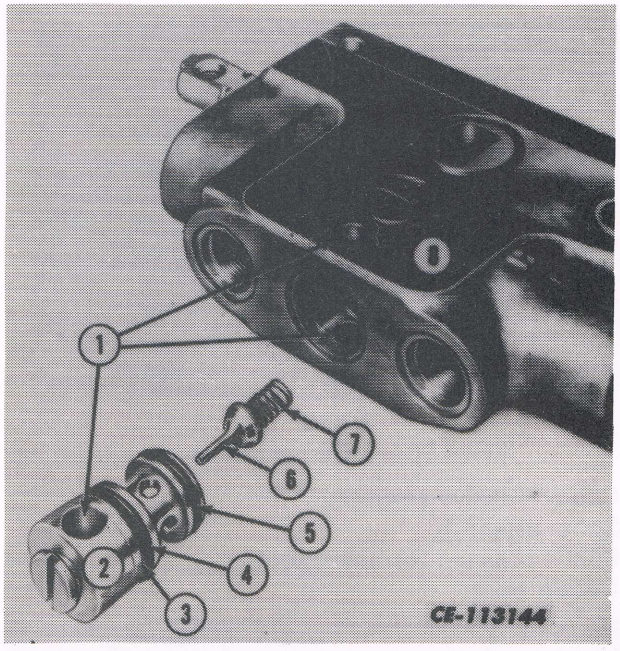

Fig. 7
Retainer Seat and Poppet Valve

1. Bolt holes must be aligned.
2. Retainer seat.
3. Back-up washer.
4. "O" ring.
5. "O" ring.
6. Check poppet
7. Spring.
8. Valve body

BOOM CONTROL VALVE OVERHAUL

DISASSEMBLY (Refer to Fig. 10)

1. Remove the check poppet assembly.

2. Remove the circuit relief valve capsule from the spool control end and the plug from the spring end of the valve body (5). Remove the "O" rings and back-up washers from the valve body.

3. Clamp the valve body in a vise with brass jaws as shown in Fig. 8. Loosen the control valve cap (19) and sleeve assembly. See Fig. 10.

4. Insert a punch through the spool as illustrated. Hold a rag beneath the sleeve. Then firmly pull the sleeve off the spool. The detent balls will fall into the rag. See Fig. 8.

DISASSEMBLY (Continued)

5. Remove the spool from the valve body and remove the spool end "O" ring seal and retainer. Clamp the detent actuator in a vise with brass jaws and unscrew the spool using a punch inserted through the spool as illustrated in Fig. 9.

IMPORTANT: *Do not grasp the actuator with pliers, or use any other method which may damage the actuator assembly.*

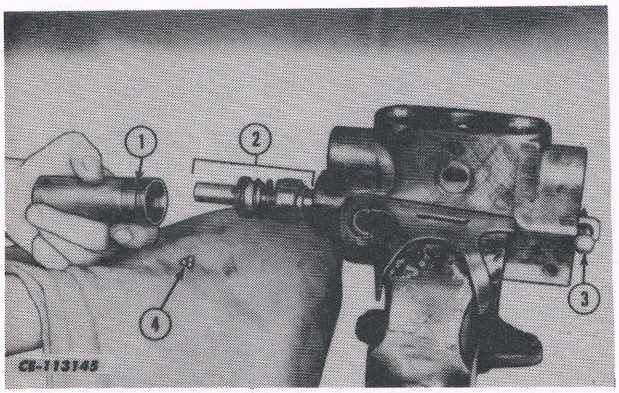

Fig. 8
Valve Spool, Cap and Sleeve

1. Cap and sleeve assembly.
2. Spool assembly.
3. Punch inserted through spool.
4. Detent balls.

6. Remove the control valve cap (19) from the cap retaining sleeve (21). Remove the position control sleeve (20). See Fig. 10.

7. If the centering spring actuator (27) requires service, remove the spring retaining plug. Record the position of the plug for reference during reassembly. Remove the detent actuating ball (25) and washer (24). See Fig. 10.

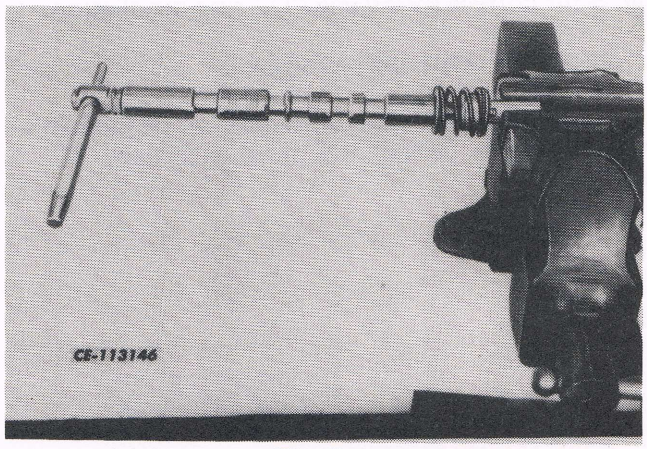

Fig. 9
Removing and Installing the Detent Actuator

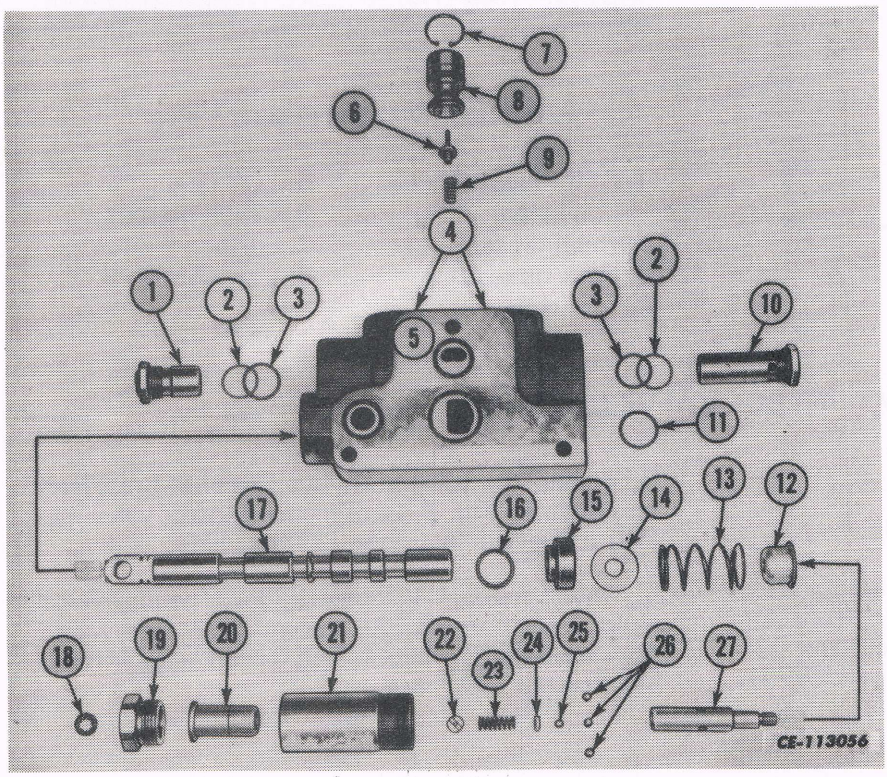

Fig. 10
Boom Control Valve

1. Plug
2. Back-up washer (2).
3. "O" ring (2).
4. Work ports (2).
5. Valve body.
6. Check poppet.
7. Snap ring.
8. Poppet retainer.
9. Spring.
10. Boom circuit relief valve.
11. "O" ring.
12. Spring retainer.
13. Spring.
14. Washer.
15. "O" ring retainer.
16. "O" ring.
17. Spool.
18. Plug.
19. Control valve cap.
20. Position control sleeve.
21. Cap retaining sleeve.
22. Plug.
23. Spring.
24. Washer.
25. Detent actuating ball.
26. Detent balls (3).
27. Centering spring acutator.

INSPECTION AND REPAIR

1. Discard all "O" rings and back-up washers. Replace with new.

2. Wash all parts in a suitable solvent. Dry thoroughly with compressed air. Lubricate machine surfaces of usable parts with clean oil.

3. Inspect the valve body and bore for wear, scratches or grooves. Remove defects with crocus cloth.

NOTE: *The valve body and spool are not serviceable. If either is damaged, replace the whole valve.*

4. Inspect the spool for easy movement in the valve body. Replace the valve if binding is evident.

5. Check all springs for damage, distortion or weakness. Springs meeting the requirements in "SPECIFICATIONS" should function properly. Springs not meeting the requirements must be replaced.

6. Check the remaining parts for cracks, chips, grooves or wear. Replace if necessary.

REASSEMBLY

1. If the centering spring actuator was disassembled, install the large ball, washer and spring. Install the plug in the same position as removed. If new parts are being used, install the plug flush with actuator.

2. Install the position control sleeve in the cap retaining sleeve and install the control valve cap.

3. Assemble the centering spring, retainer and washer on the detent actuator and start the actuator on the spool. Clamp the actuator in a vise with brass jaws and tighten the spool using a punch inserted through the spool as illustrated.

IMPORTANT: *Do not grasp the actuator with pliers, or use any other method which may damage the actuator assembly.*

4. Install a new spool "O" ring in the control end of the valve body. Position the spring end "O" ring and retainer on the spool.

5. Clamp the valve body in a vise with brass jaws as illustrated, spring end facing upward. Install the spool assembly.

6. Position the three detent balls in the actuator holes as illustrated, using petroleum jelly to hold them in place. See Fig. 11.

7. Install the cap and sleeve assembly. Be careful not to displace the detent balls. Tighten by hand until the spool snaps into the hold position. If the spool does not snap into the hold position while tightening the cap and sleeve assembly by hand, remove the assembly and reposition the balls.

8. Tighten the end cap and sleeve assembly. Check the float detent for proper operation and adjust the actuator plug, if necessary.

9. Install new "O" rings with back-up washers in the circuit relief and plug bores. Install the plug and circuit relief valve with "O" rings.

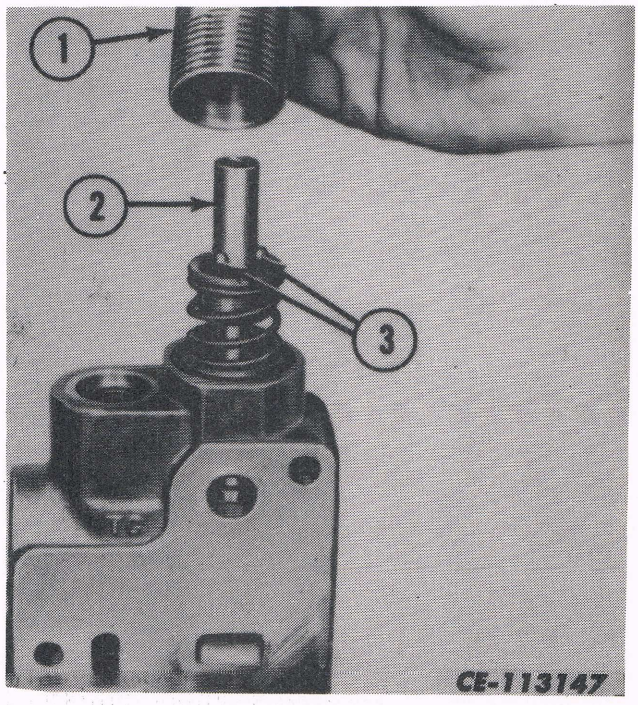

Fig. 11
Detent Assembly, Sleeve and Cap

1. Cap and sleeve assembly.
2. Detent actuator.
3. Detent balls (3).

REASSEMBLY (Continued)

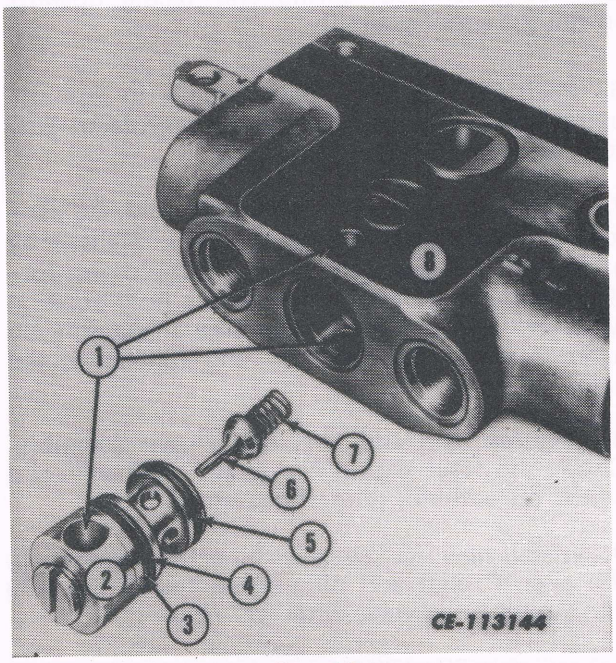

Fig. 12
Retainer Seat and Poppet Valve

1. Bolt holes must be aligned.
2. Retainer seat.
3. Back-up washer.
4. "O" ring.
5. "O" ring.
6. Check poppet.
7. Spring.
8. Valve body.

LOADER BUCKET SELF-LEVELING VALVE (IF EQUIPPED)

REMOVAL (Refer to Fig. 13)

1. Remove the pin (1) securing ball joint (2) to valve (3).

2. Disconnect the following tubes at the valve:

   a. Head return tube (4)
   b. Rod return tube (5)
   c. Drain tube (6)
   d. Head pressure tube tee (7) from elbow (8)
   e. Pressure tube (9)

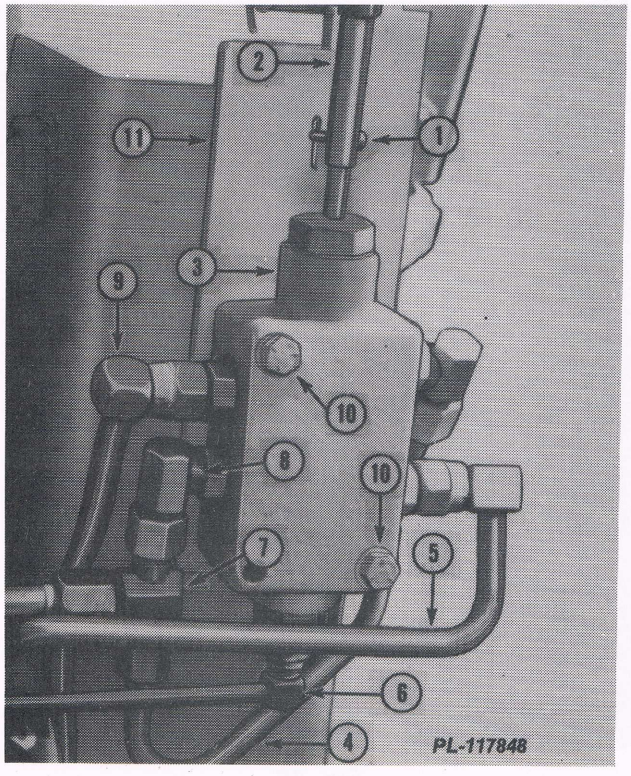

Fig. 13
Self-Leveling Valve Removal

1. Pin
2. Ball Joint
3. Self-Leveling Valve
4. Head Return Tube
5. Rod Return Tube
6. Drain Tube
7. Head Pressure Tube Tee
8. Elbow
9. Pressure Tube
10. Bolts
11. Mounting Plate

3. Remove the bolts (10) and valve from mounting plate (11).

DISASSEMBLY (Refer to Fig. 14)

1. Remove the plunger plug (3) with plunger (6). Separate the plunger from plug. Discard the two "O" rings (4 and 5) from plug.

2. Remove the spool (1) and spring (2) from valve body (8).

3. Remove union (7) with "O" ring (4) from valve body. Discard "O" ring.

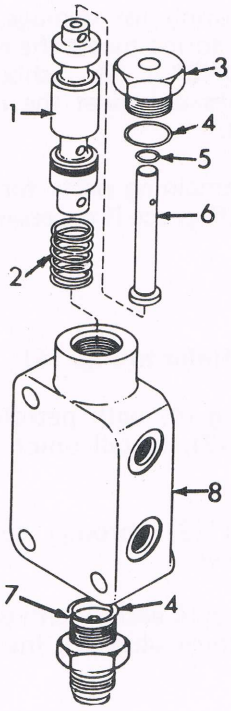

Fig. 14
Self-Leveling Valve

1. Spool
2. Spring
3. Plunger Plug
4. "O" Ring
5. "O" Ring
6. Plunger
7. Union
8. Valve Body

LOADER BUCKET SELF-LEVELING VALVE (IF EQUIPPED)

INSPECTION AND REPAIR

1. Replace discarded "O" rings with new.

2. Wash all parts in a suitable solvent. Dry thoroughly with compressed air. Lubricate machine surfaces of usable parts with clean oil.

3. Inspect the valve body and bore for wear, scratches or grooves. Remove defects with crocus cloth.

NOTE: *The valve body and spool are not serviceable. If either is damaged, replace the whole valve.*

4. Inspect the spool for easy movement in the valve body bore. Replace the valve if binding is evident.

5. Check the spring for damage, distortion or weakness. If the spring meets the requirements in "SPECIFICATIONS", it should function. If the spring does not meet the requiements, it must be replaced.

6. Check the remaining parts for cracks, chips, grooves or wear. Replace if necessary.

REASSEMBLY (Refer to Fig. 14)

1. Coat "O" ring (4) with petroleum jelly and install on union (7). Install union to valve body (8).

2. Install spring (2) through spool (1) from plunger side of valve.

3. Coat "O" rings (4 and 5) with petroleum jelly and install to plunger plug (3). Insert plunger (6) into plug.

4. Install plug with plunger to valve.

INSTALLATION (Refer to Fig. 15)

1. Install valve (3) to mounting support loosely with bolts (10).

2. Reconnect the tubes loosely at the valve:
   a. Pressure Tube (9)
   b. Elbow (8) to Head Pressure
   c. Drain Tube (6)
   d. Rod Return Tube (5)
   e. Head Return Tube (4)

3. Connect ball joint (2) to valve.

4. Tighten the valve mounting bolts (10).

5. Tighten all the hydraulic connections.

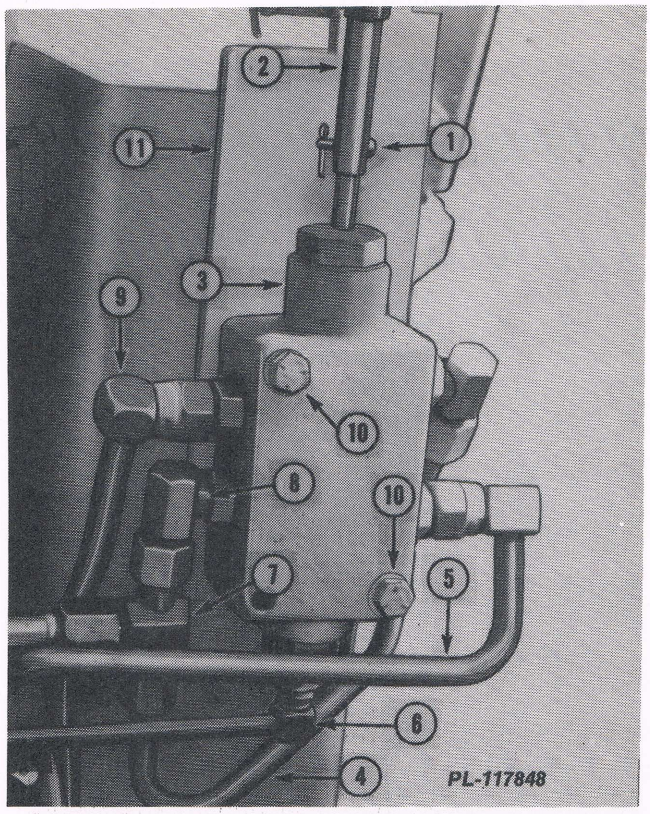

Fig. 15
Self-Leveling Valve Installation

1. Pin
2. Ball Joint
3. Self-Leveling Valve
4. Head Return Tube
5. Rod Return Tube
6. Drain Tube
7. Head Pressure Tube Tee
8. Elbow
9. Pressure Tube
10. Bolts
11. Mounting Plate

ADJUSTMENT

1. For adjustment procedures, refer to machine "OPERATOR'S MANUAL".

REMOVAL

1. Position the loader with bucket on the ground.

CAUTION: *Do not remove any of the cylinders with loader off the ground.*

2. Remove the lines to each end of cylinder. Cap and plug the cylinder and lines.

3. Support the cylinder using a suitable hoist or crane.

4. Remove the headed and cotter pins and using a driver, remove cylinder mounting pins.

5. Remove the cylinder.

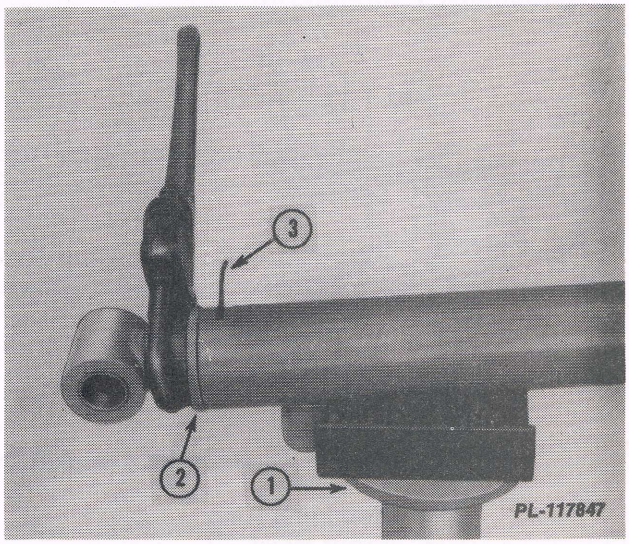

Fig. 16
Front Head Retaining Ring Removal

1. Stand
2. Front Head
3. Retaining Ring

DISASSEMBLY

1. Drain the fluid from the cylinder.

2. Clamp the cylinder base in a vise. Support the rod end of the cylinder with a stand (1, Fig. 16).

3. Rotate the front head (2, Fig. 16) to align the end of the retaining ring (3, Fig. 16) with the slot in the cylinder. Start the end of the retaining ring out of the slot with a small screwdriver. Rotate the front head to remove the retaining ring.

4. Remove the front head with a twisting motion. Pull the piston rod with front head and piston assembly carefully from the cylinder bore.

5. Clamp the piston rod eye in a vise and support the piston end of the rod with a stand. Remove the piston lock nut.

6. Remove the piston (2, Fig. 17) and front head (1, Fig. 17) from the piston rod (3, Fig. 17).

7. Remove the wiper seal (3, Fig.18), rod seal (4, Fig. 18), "O" ring (5, Fig. 18) and back-up washer (6, Fig. 18) from the front head. Use an PLT-106 "O" ring tool to remove seals and back-up washers.

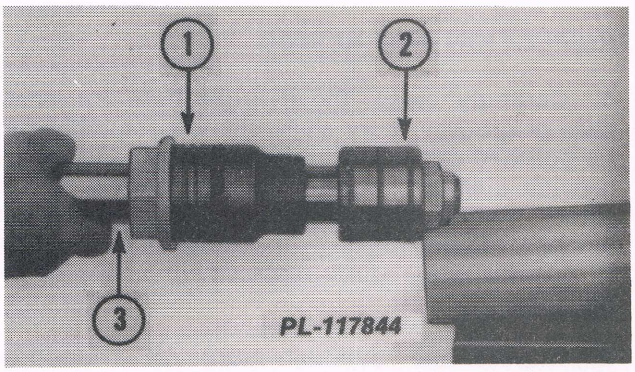

Fig. 17
Front Head, Piston and Rod Removed

1. Front Head
2. Piston
3. Piston Rod

8. Remove the bearing rings (12 and 15, Fig. 18) from the piston. The seal ring does not need to be removed unless it is damaged, which may occur during disassembly.

9. If necessary, remove bushing (16, Fig. 18) from the rod or body using a suitable driver.

FRONT END LOADER
BOOM AND BUCKET CYLINDER

DISASSEMBLY (Continued)

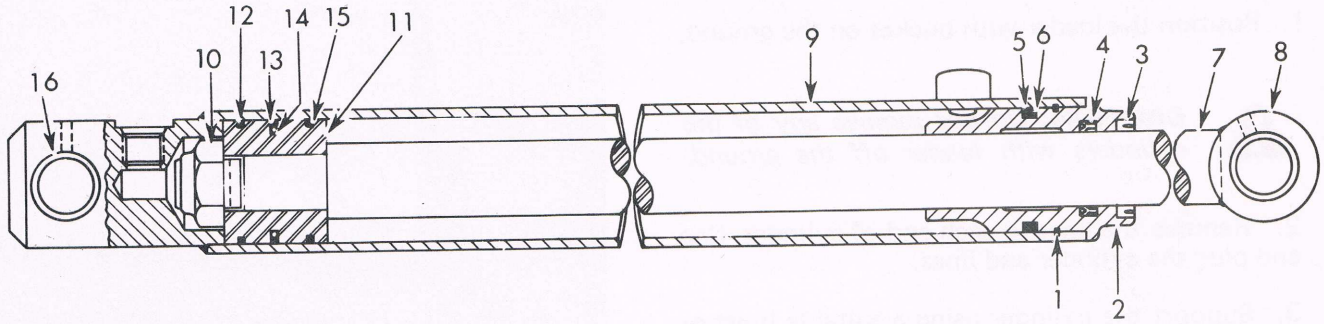

PL-117810

Fig. 18
Boom and Bucket Cylinder Cross Section View

1. Retaining Ring
2. Front Head
3. Wiper Seal
4. Rod Seal
5. "O" Ring
6. Back-Up Washer
7. Piston Rod
8. Bushing
9. Cylinder Body
10. Nut
11. Piston
12. Bearing Ring
13. Seal Ring
14. "O" Ring
15. Bearing Ring
16. Bushing

INSPECTION AND REPAIR

1. Carefully check the cylinder bore for scratches or grooves. Very slight shallow scratches can be polished out with fine emery cloth and oil, to provide a smooth surface to the packing. Use a rotary motion when polishing. Never stroke the emery lenthwise through the tube. Deeper scores or grooves will require replacement of the cylinder tube.

2. Inspect the cylinder bore for roundness throughout its length. If a tight spot is noticed while removing the piston, the area of binding should be given particular attention. A tube that is out of round should be replaced.

3. Inspect the piston bearing and seal rings for excessive wear, frayed edges of imbedded particles of foreign material. DO NOT remove the piston seal unless it is damaged and replacement is intended. Refer to "REASSEMBLY" for piston seal installation procedure.

IMPORTANT: *Do not remove the piston "O" ring unless replacement is intended.*

4. Inspect the piston rod for scratches or grooves. Any minor scratches, nicks or scores can be removed with medium grit emery cloth. Polish with a rotary motion rather than lengthwise. The rod can now be checked for alignment or straightness.

5. Replace all "O" rings (except the one under the piston seal) and back-up washers.

6. Inspect all threads for damage or wear.

7. Clean all threads with a stiff brush and solvent.

8. Inspect the bore of the front head for scratches or burrs. Polish out as required.

REASSEMBLY

IMPORTANT: *It will be necessary to have a clean container of Hy-Tran to dip parts in and a source of hot water (180-200° F) to facilitate reassembly.*

REASSEMBLY (Continued)

1. Be certain all parts have been thoroughly cleaned and dried with compressed air.

2. Carefully press in a new wiper seal until it bottoms on its seat in the front head.

3. Install the "O" ring, rod seal and back-up washer in the front head.

IMPORTANT: *Install rod seal with lips facing in towards piston.*

4. Dip the front head in clean Hy-Tran and install on the piston rod. Install the "O" ring on the piston rod and install the piston. Lubricate the piston nut with Hy-Tran and install the piston Refer to specifications for proper torque.

5. If they were removed, install the piston "O" ring and seal ring as follows:

   a. Place a piece of shim stock around the piston OD covering up the first groove.
   b. Dip the "O" ring in Hy-Tran and "wring" it into position over the shim stock and into place in the piston groove.
   c. Place the piston seal in hot water (180° to 200° F) to increase flexibility.
   d. Remove the seal from the water and immediately install the seal over the shim stock and work it into the center groove of the piston.
   e. Using a piston ring compressor or a suitable hose clamp, compress the piston seal in its groove until ready to install it into the cylinder.

6. Install the front and rear piston bearing rings.

7. Lubricate the piston, piston rod and cylinder in clean Hy-Tran. Install the piston into the cylinder. Be very careful not to damage the seal and bearing rings when passing the cylinder bore edge or retainer groove.

8. "Twist" the front head into position. Install the retainer ring.

9. Plug the ports to prevent entrance of dirt.

INSTALLATION

1. Installation is the reverse of removal.

World Wide Product Support

PAY LINE
GROUP